EPA/635/R-11/081A
www.epa.gov/iris

TOXICOLOGICAL REVIEW

OF

n-BUTANOL

(CAS No. 71-36-3)

In Support of Summary Information on the Integrated Risk Information System (IRIS)

September 2011

NOTICE

This document is an **External Review draft**. This information is distributed solely for the purpose of pre-dissemination peer review under applicable information quality guidelines. It has not been formally disseminated by EPA. It does not represent and should not be construed to represent any Agency determination or policy. It is being circulated for review of its technical accuracy and science policy implications.

U.S. Environmental Protection Agency
Washington, DC

DISCLAIMER

This document is a preliminary draft for review purposes only. This information is distributed solely for the purpose of pre-dissemination peer review under applicable information quality guidelines. It has not been formally disseminated by EPA. It does not represent and should not be construed to represent any Agency determination or policy. Mention of trade names or commercial products does not constitute endorsement or recommendation for use.

CONTENTS - TOXICOLOGICAL REVIEW OF N-BUTANOL (CAS No. 71-36-3)

LIST OF TABLES

LIST OF FIGURES

LIST OF ABBREVIATIONS AND ACRONYMS

ACh	acetylcholine
AChE	acetylcholinesterase
ACSL	Advanced Continuous Simulation Language
ADH	alcohol dehydrogenase
AIC	Akaike's Information Criterion
ALP	alkaline phosphatase
ALT	alanine aminotransferase
AMPA	α-amino-3-hydroxy-5-methyl-4-isoxazole propionic acid
AST	aspartate aminotransferase
ATP	adenosine triphosphate
ATPase	adenosine triphosphatase
AUC	area under the curve
BMD	benchmark dose
BMDL	95% lower bound on BMD
BMDS	Benchmark Dose Software
BMR	benchmark response
CASRN	Chemical Abstracts Service Registry Number
CI	confidence interval
CNS	central nervous system
CO_2	carbon dioxide
DNA	deoxyribonucleic acid
ER-α	estrogen receptor α
GABA	γ-aminobutyric acid
GC	gas chromatography
GD	gestation day
GLDH	glutamate dehydrogenase
Glu	glutamate
GPT	glutamate pyruvate transaminase
GSH	reduced glutathione
GSSG	oxidized glutathione
HEC	human equivalent concentration
HEK	human embryonic kidney
5-HT	5-hydroxytryptamine
i.p.	intraperitoneal
IRIS	Integrated Risk Information System
i.v.	intravenous
LDH	lactate dehydrogenase
LH	luteinizing hormone
LOAEL	lowest-observed-adverse-effect level
MDA	malondialdehyde
4-MP	4-methylpyrazole
nACh	nicotinic acetylcholine
NADPH	nicotinamide adenine dinucleotide phosphate
NMDA	*N*-methyl-D-aspartate
NOAEL	no-observed-adverse-effect level
NRC	National Research Council

PA	phosphatidic acid
PBPK	physiologically based pharmacokinetic
PKC	protein kinase C
PLD	phospholipase D
PMA	4 β-phorbol 12-myristate 13-acetate
PND	postnatal day
POD	point of departure
QSAR	quantitative structure-activity relationship
RBC	red blood cell
RfC	reference concentration
RfD	reference dose
RNA	ribonucleic acid
SD	standard deviation
TSCATS	Toxic Substances Control Act Test Submission
UF	uncertainty factor
U.S. EPA	U.S. Environmental Protection Agency

FOREWORD

The purpose of this Toxicological Review is to provide scientific support and rationale for the hazard and dose-response assessment in IRIS pertaining to chronic exposure to n-butanol. It is not intended to be a comprehensive treatise on the chemical or toxicological nature of n-butanol.

The intent of Section 6, *Major Conclusions in the Characterization of Hazard and Dose Response*, is to present the major conclusions reached in the derivation of the reference dose, reference concentration and cancer assessment, where applicable, and to characterize the overall confidence in the quantitative and qualitative aspects of hazard and dose response by addressing the quality of data and related uncertainties. The discussion is intended to convey the limitations of the assessment and to aid and guide the risk assessor in the ensuing steps of the risk assessment process.

For other general information about this assessment or other questions relating to IRIS, the reader is referred to EPA's IRIS Hotline at (202) 566-1676 (phone), (202) 566-1749 (fax), or hotline.iris@epa.gov (email address).

AUTHORS, CONTRIBUTORS, AND REVIEWERS

CHEMICAL MANAGER/AUTHOR

Ambuja S. Bale
National Center for Environmental Assessment
U.S. Environmental Protection Agency
Washington, DC

CO-AUTHORS

Susan Makris
National Center for Environmental Assessment
U.S. Environmental Protection Agency
Washington, DC

Alan Sasso
National Center for Environmental Assessment
U.S. Environmental Protection Agency
Washington, DC

Jamie B. Strong
National Center for Environmental Assessment
U.S. Environmental Protection Agency
Washington, DC

James A. Weaver
National Center for Environmental Assessment
U.S. Environmental Protection Agency
Washington, DC

CONTRIBUTORS

Ted Berner
National Center for Environmental Assessment
U.S. Environmental Protection Agency
Washington, DC

Karen Hogan
National Center for Environmental Assessment
U.S. Environmental Protection Agency
Washington, DC

Chester Rodriguez
Office of Chemical Safety and Pollution Prevention
U.S. Environmental Protection Agency
Washington, DC

Paul Schlosser
National Center for Environmental Assessment
U.S. Environmental Protection Agency
Research Triangle Park, NC

Hui-Min Yang
National Center for Environmental Assessment
U.S. Environmental Protection Agency
Washington, DC

CONTRACTOR SUPPORT

Heather Carlson-Lynch
Michael Lumpkin
Gary Diamond
Daniel Plewak
Julie Stickney
Chemical, Biological and Environmental Center
SRC, Inc.
7502 Round Pond Road
North Syracuse, NY 13212

REVIEWERS

This document has been provided for review to EPA scientists, interagency reviewers from other federal agencies and White House offices.

INTERNAL EPA REVIEWERS

Ted Berner
National Center for Environmental Assessment
U.S. Environmental Protection Agency
Washington, DC

Philip J. Bushnell
National Health and Environmental Effects Research Laboratory
U.S. Environmental Protection Agency
Research Triangle Park, NC

John Cowden
National Center for Environmental Assessment
U.S. Environmental Protection Agency
Research Triangle Park, NC

Barbara Glenn
National Center for Environmental Assessment
U.S. Environmental Protection Agency
Washington, DC

Karl Jensen
National Health and Environmental Effects Research Laboratory
U.S. Environmental Protection Agency
Research Triangle Park, NC

Ginger Moser
National Health and Environmental Effects Research Laboratory
U.S. Environmental Protection Agency
Research Triangle Park, NC

1. INTRODUCTION

This document presents background information and justification for the Integrated Risk Information System (IRIS) Summary of the hazard and dose-response assessment of n-butanol. IRIS Summaries may include oral reference dose (RfD) and inhalation reference concentration (RfC) values for chronic and other exposure durations, and a carcinogenicity assessment.

The RfD and RfC, if derived, provide quantitative information for use in risk assessments for health effects known or assumed to be produced through a nonlinear (presumed threshold) mode of action. The RfD (expressed in units of mg/kg-day) is defined as an estimate (with uncertainty spanning perhaps an order of magnitude) of a daily exposure to the human population (including sensitive subgroups) that is likely to be without an appreciable risk of deleterious effects during a lifetime. The inhalation RfC (expressed in units of mg/m^3) is analogous to the oral RfD, but provides a continuous inhalation exposure estimate. The inhalation RfC considers toxic effects for both the respiratory system (portal-of-entry) and for effects peripheral to the respiratory system (extrarespiratory or systemic effects). Reference values are generally derived for chronic exposures (up to a lifetime), but may also be derived for acute (≤24 hours), short-term (>24 hours up to 30 days), and subchronic (>30 days up to 10% of lifetime) exposure durations, all of which are derived based on an assumption of continuous exposure throughout the duration specified. Unless specified otherwise, the RfD and RfC are derived for chronic exposure duration.

The carcinogenicity assessment provides information on the carcinogenic hazard potential of the substance in question and quantitative estimates of risk from oral and inhalation exposure may be derived. The information includes a weight-of-evidence judgment of the likelihood that the agent is a human carcinogen and the conditions under which the carcinogenic effects may be expressed. Quantitative risk estimates may be derived from the application of a low-dose extrapolation procedure. If derived, the oral slope factor is a plausible upper bound on the estimate of risk per mg/kg-day of oral exposure. Similarly, an inhalation unit risk is a plausible upper bound on the estimate of risk per $\mu g/m^3$ air breathed.

Development of these hazard identification and dose-response assessments for n-butanol has followed the general guidelines for risk assessment as set forth by the National Research Council (NRC, 1983). U.S. Environmental Protection Agency (U.S. EPA) Guidelines and Risk Assessment Forum technical panel reports that may have been used in the development of this assessment include the following: *Guidelines for the Health Risk Assessment of Chemical Mixtures* (U.S. EPA, 1986a), *Guidelines for Mutagenicity Risk Assessment* (U.S. EPA, 1986b), *Recommendations for and Documentation of Biological Values for Use in Risk Assessment* (U.S. EPA, 1988), *Guidelines for Developmental Toxicity Risk Assessment* (U.S. EPA, 1991), *Interim Policy for Particle Size and Limit Concentration Issues in Inhalation Toxicity* (U.S. EPA,

1994a), *Methods for Derivation of Inhalation Reference Concentrations and Application of Inhalation Dosimetry* (U.S. EPA, 1994b), *Use of the Benchmark Dose Approach in Health Risk Assessment* (U.S. EPA, 1995), *Guidelines for Reproductive Toxicity Risk Assessment* (U.S. EPA, 1996), *Guidelines for Neurotoxicity Risk Assessment* (U.S. EPA, 1998), *Science Policy Council Handbook*: *Risk Characterization* (U.S. EPA, 2000a), *Benchmark Dose Technical Guidance Document* (U.S. EPA, 2000b), *Supplementary Guidance for Conducting Health Risk Assessment of Chemical Mixtures* (U.S. EPA, 2000c), *A Review of the Reference Dose and Reference Concentration Processes* (U.S. EPA, 2002), *Guidelines for Carcinogen Risk Assessment* (U.S. EPA, 2005a), *Supplemental Guidance for Assessing Susceptibility from Early-Life Exposure to Carcinogens* (U.S. EPA, 2005b), *Science Policy Council Handbook: Peer Review* (U.S. EPA, 2006a), *A Framework for Assessing Health Risks of Environmental Exposures to Children* (U.S. EPA, 2006b) and *Recommended Use of Body Weight$^{3/4}$ as the Default Method in Derivation of the Oral Reference Dose* (U.S. EPA, 2011).

The literature search strategy employed for n-butanol was based on the chemical name, Chemical Abstracts Service Registry Number (CASRN), and multiple common synonyms. Any pertinent scientific information submitted by the public to the IRIS Submission Desk was also considered in the development of this document. Primary, peer-reviewed literature identified through July 2011 was included where that literature was determined to be critical to the assessment. The relevant literature included publications on n-butanol which were identified through Toxicology Literature Online (TOXLINE), PubMed, the Toxic Substance Control Act Test Submission Database (TSCATS), the Registry of Toxic Effects of Chemical Substances (RTECS), the Chemical Carcinogenesis Research Information System (CCRIS), the Developmental and Reproductive Toxicology/Environmental Teratology Information Center (DART/ETIC), the Environmental Mutagens Information Center (EMIC) and Environmental Mutagen Information Center Backfile (EMICBACK) databases, the Hazardous Substances Data Bank (HSDB), the Genetic Toxicology Data Bank (GENE-TOX), Chemical abstracts, and Current Contents. Other peer-reviewed information, including health assessments developed by other organizations, review articles, and independent analyses of the health effects data were retrieved and may be included in the assessment where appropriate.

2. CHEMICAL AND PHYSICAL INFORMATION

n-Butanol is a flammable, colorless liquid with a vinous odor (O'Neil, 2006; Lewis, 2000). Physical and chemical properties of n-butanol are shown below in Table 2-1. n-Butanol is a natural component of many foods and is formed during the fermentation of carbohydrates (HSDB, 2009). Commercially, n-butanol is obtained via n-butyraldehyde formed from the Oxo reaction of propylene (Billig, 2001). According to company reports provided to U.S. EPA under the Inventory Update Reporting program, the production volume of n-butanol in the United States during 2006 was >1 billion pounds (U.S. EPA, 2009). Commercial derivatives of n-butanol include n-butyl acrylate, methacrylate, butyl glycol ethers, 2-butoxyethanol, and butyl acetate (Billig, 2001). n-Butanol is used as a direct solvent in paints, surface coatings, lacquers, thinners, pharmaceutical formulations, waxes, and resins (Billig, 2001). It is also used to make plasticizer esters and mono-, di-, and tributylamines (Billig, 2001). More recently, n-butanol has been used as an oxygenate in fuels (see http://www.epa.gov/oust/oxygenat/index.htm).

Table 2-1. Physical and chemical properties of n-butanol

Synonym(s)	n-Butyl alcohol; butyl alcohol; 1-butyl alcohol; 1-butanol; 1-hydroxybutane; butyl hydroxide; butyric alcohol; propyl carbinol; hemostyp; methylolpropane; propylmethanol; n-butan-1-ol	ChemID Plus, 2009
Structure		ChemID Plus, 2009
Chemical formula	$C_4H_{10}O$	ChemID Plus, 2009
CASRN	71-36-3	ChemID Plus, 2009
Molecular weight	74.121	Lide, 2008
Form	Colorless liquid	Lewis, 2000
Odor	Vinous; similar to fusel oil	O'Neil, 2006; Lewis, 2000
Melting point	-88.6°C	Lide, 2008
Boiling point	117.73°C	Lide, 2008
Odor threshold Air Water	 0.83 ppm 7.1 ppm	 Amoore and Hautala, 1983 Amoore and Hautala, 1983
Density	0.8095 g/cm^3 at 20°C	Lide, 2008
Log octanol-water partition coefficient (log K_{ow})	0.88	Hansch et al., 1995
Solubility: Water Organic solvents	 6.32×10^4 mg/L at 25°C Soluble in benzene, miscible in ethanol and diethyl ether, very soluble in acetone	 Tewari et al., 1982 Lide, 2008
Vapor pressure	6.70 mm Hg at 25°C	Boublik et al., 1984
Henry's law constant	8.81×10^{-6} atm-m^3/mol	Buttery et al., 1969
Flash point	2–3°C	Billig, 2001
Auto ignition temperature	365°C	Lewis, 2000
Explosive limits in air	1.4–11.2%	Billig, 2001
Conversion factors		

Table 2-1. Physical and chemical properties of n-butanol

ppm to mg/m^3 mg/m^3 to ppm	1 ppm = 3.08 mg/m^3 1 mg/m^3 = 0.32 ppm	Calculated Calculated

n-Butanol is expected to have high mobility in soil and is not expected to bind to organic matter and sediments in water (HSDB, 2009). n-Butanol in soil and water is expected to be removed through volatilization into the atmosphere and through biodegradation (HSDB, 2009). The environmental fate assessment indicates that n-butanol will be completely removed from soil and water within days to weeks (HSDB, 2009). In the atmosphere, n-butanol is expected to be broken down by reaction with photochemically-produced hydroxyl radicals with a calculated half-life of 46 hours (HSDB, 2009).

3. TOXICOKINETICS

Toxicokinetic studies of n-butanol in humans and experimental animals are described below. n-Butanol is readily absorbed following oral administration in rats (80%; DiVincenzo and Hamilton, 1979a), moderately absorbed following an inhalation exposure in rats and humans (50%; DiVincenzo and Hamilton, 1979a; Astrand et al., 1976), and poorly absorbed following an in vitro dermal exposure (1%; Boman and Maibach, 2000). Once absorbed, n-butanol is rapidly distributed to many tissues including the liver, kidney, lung, brain, and heart (Kaneko et al., 1994; DiVincenzo and Hamilton, 1979a). n-Butanol is rapidly metabolized to butyric aldehyde by alcohol dehydrogenase (ADH) and further to n-butyric acid by aldehyde dehydrogenase (ECETOC, 2003). n-Butanol is also oxidized by cytochrome P450 in rat liver (Albano et al., 1991). Excretion of n-butanol is primarily as carbon dioxide (CO_2) in exhaled breath with minor amounts eliminated in rat urine (2.6–5.1%) and feces (0.6–1.1%) (DiVincenzo and Hamilton, 1979a). A physiologically based pharmacokinetic model has been developed (Teeguarden et al., 2005) to describe blood kinetics for n-butyl acetate and its metabolites, n-butanol and n-butyric acid, in rats and humans.

3.1. ABSORPTION

3.1.1. Oral Absorption

DiVincenzo and Hamilton (1979a) administered gavage doses of 4.5, 45, or 450 mg/kg [^{14}C]-n-butanol in corn oil to male CD (Sprague-Dawley) rats (2–4/group) that had fasted for 16 hours. After administration, expired air, urine, and feces were collected for 24 hours. By 24 hours post exposure, 78.3–83.3% of the amount administered was recovered as expired $^{14}CO_2$. A smaller fraction, approximately 0.20–0.56% of the administered radioactivity, was recovered as the unchanged compound in expired air at 24 hours post exposure. Urine and fecal elimination accounted for approximately 2.6–5.0 and 0.6–1.1% of the administered radioactivity, respectively, at 24 hours post exposure. Thus, up to 89% of the administered n-butanol was absorbed and measured in breath or urine. The extent of absorption was not dose-dependent.

DiVincenzo and Hamilton (1979a) also collected blood samples from three male Sprague-Dawley rats at 0.5, 1, 2, 4, and 8 hours after gavage dosing with 450 mg/kg n-butanol. A peak plasma concentration of 70.9 µg/mL was measured 1 hour after gavage dosing.

3.1.2. Respiratory Tract Absorption

Astrand et al. (1976) exposed 12 volunteers (all male) to 300 or 600 mg/m^3 (100 and 200 ppm) n-butanol in air for four 30-minute periods of rest or exercise. The concentration of n-butanol in inspiratory air was continuously measured. Expiratory air was collected and analyzed for n-butanol. The amount of n-butanol absorbed was calculated as the difference

between the total quantities in inspiratory and expiratory air. Arterial and venous blood was collected and analyzed for n-butanol concentration. At rest, 46–48% of n-butanol was taken up by inhalation, while 36–41% was absorbed during exercise (intensity estimated at 50–150 watts) and was independent of exposure concentration. Measured arterial blood concentrations after 30 minutes of exposure ranged from 0.5 to 1.3 mg/kg

DiVincenzo and Hamilton (1979a) exposed four male beagle dogs to 50 ppm (150 mg/m^3) n-butanol vapor for 6 hours in a whole-body chamber. Venous blood was collected at regular intervals. Based on breath concentrations, the uptake curve indicated that approximately 55% of the inhaled vapor was absorbed through the lungs. Expired air concentrations of 22 ppm (67 mg/m^3) n-butanol were essentially unchanged during the 6-hour exposure.

Swiercz et al. (1995) exposed 32 male Wistar rats (4/exposure duration group) to 100 ppm (300 mg/m^3) n-butanol for up to 7 hours. Blood samples were obtained from separate groups of four rats prior to exposure and at hourly intervals from 1 to 7 hours and analyzed for n-butanol. The concentration of n-butanol in blood increased rapidly with inhalation exposure, reaching near steady-state concentrations of approximately 2.2 µmol/dm^3 (20 mg/kg) within 1 hour of exposure. Mean blood n-butanol levels changed little throughout the remaining exposure period, with blood from rats measured at 4 hours of exposure exhibiting a maximum n-butanol concentration of 2.8 µmol/dm^3 (26 mg/kg).

3.1.3. Dermal Absorption

Boman and Maibach (2000) conducted in vitro studies using male and female human thigh skin samples obtained at autopsy in a 3-mL flow-through penetration/evaporation cell. Skin was exposed to neat n-butanol under either unventilated or ventilated conditions with various air flow rates. Steady-state absorption was not attained during the 24-hour exposure time studied for either the unventilated or ventilated exposures. In the unventilated experiment, the absorption of neat butanol through the skin samples varied between 2.2 and 9.4%; the absorption during ventilation (i.e., allowing for n-butanol evaporation from the skin) resulted in ≤1% absorption.

Scheuplein and Blank (1976) conducted ex vivo studies using human abdominal skin samples obtained at autopsy to determine permeability rates for n-butanol in an aqueous solution. Sheets of dermis or epidermis were fitted into a permeability cell in which one side of the sample was exposed to neat n-butanol or to n-butanol in an aqueous solution (2.54 cm^2 exposure area), while the other was exposed to water, from which aliquots were drawn to measure the flux of n-butanol across the skin. In aqueous solution, the permeability rates of the epidermis and dermis were 2.5×10^3 and 30.0×10^3 cm/hour, respectively. For neat n-butanol, the permeability rates were 0.06×10^3 and 1.0×10^3 cm/hour for the epidermis and dermis, respectively.

Using skin preparations from nude mice and glass diffusion cells, Behl et al. (1984) measured permeability coefficients of 3.7×10^3 cm/hour for dorsal skin and 23.7×10^3 cm/hour for abdominal skin. Under hydrated conditions using skin preparations from male Sprague-Dawley rats, Behl et al. (1983) determined the n-butanol permeability coefficient to be increased by approximately 20–25% through the first 5 hours of hydration, and remained at this value (6.4×10^3 cm/hour) through the end of the experiment at 80 hours.

DelTerzo et al. (1986) estimated an in vitro permeability rate for n-butanol in nude rat skin. Rat skin was sandwiched between 3 mL saline-filled compartments. [^{14}C]-n-butanol was introduced into the donor side of the cell, and samples were removed from both sides of the cell at predetermined intervals to measure the flux of n-butanol across the skin. From these measurements, a permeability rate of 14.2×10^3 cm/hour was calculated.

DiVincenzo and Hamilton (1979a) exposed young male beagle dogs to [^{14}C]-n-butanol using a sealed glass absorption cell secured on the shaved thorax for 60 minutes. Expired air was collected continuously using an oral endotracheal tube, and urine was collected continuously by a urethral catheter. An identical amount of [^{14}C]-n-butanol was administered intravenously to other dogs. Radioactivity excreted in the urine and exhaled breath of dermally and intravenously treated dogs was compared to determine the rate of systemic uptake by dermal absorption. Assuming that the metabolic fate and tissue disposition is identical after intravenous (i.v.) or skin administration, the calculated absorption rate was 8.8 µg minute^{-1} cm^{-2}.

Boman et al. (1995) conducted studies to evaluate the percutaneous absorption of n-butanol during intermittent exposure in guinea pigs. Groups of 5–16 animals were exposed to neat n-butanol either continuously for 4 hours or for 1 minute at 30-minute intervals over 4 hours for a total of eight intermittent exposures. At the end of 4 hours, the continuously exposed animals exhibited maximum blood n-butanol levels that were twofold higher (25.63 µM) than the levels in intermittently exposed animals (12.43 µM).

3.2. DISTRIBUTION

In vitro determination of tissue:blood partition coefficients for n-butanol suggest that it will distribute throughout the body, as calculated values were very close to 1, ranging from 0.78 to 1.08 for muscle, brain, kidney, liver, and fat (Kaneko et al., 1994). DiVincenzo and Hamilton (1979a) reported the distribution of n-butanol in male CD (Sprague-Dawley) rats gavaged with a single dose of 450 mg/kg [^{14}C]-n-butanol in corn oil after fasting for 16 hours. Blood samples were collected from three rats at 0.5, 1, 2, 4, and 8 hours after gavage dosing. Groups of four animals were sacrificed at 4, 8, or 24 hours post exposure and liver, kidney, heart, brain, lung, and adrenal glands were collected and analyzed for radioactivity. The systemic distribution was rapid, as plasma concentration of n-butanol rose from 40 µg/mL at 30 minutes post exposure to a peak at 1 hour of 70.9 µg/mL, followed by a rapid decline to <10 µg/mL at 2 hours. n-Butanol was not detected in the plasma 4 hours after gavage dosing. Peak levels of

[^{14}C]-radioactivity in rat tissues occurred from 4 to 8 hours post exposure. The highest percentages of administered [^{14}C]-radioactivity (constituting parent compound and metabolites) were recovered at 4 hours in the kidney (0.24%) and heart (0.05%), and 8 hours in the liver (3.88%), blood (0.74%), lung (0.12%), fat (0.09%), brain (0.04%), and adrenal glands (0.009%). Twenty-four hours after gavage doses of 4.5, 45, or 450 mg [^{14}C]-n-butanol/kg, approximately 12.1–16.3% of the administered radioactivity remained in the carcass. Because radioactivity was measured instead of specific compounds, these data do not inform as to the distribution of n-butanol or specific metabolites.

3.3. METABOLISM

n-Butanol is primarily metabolized to butyric aldehyde by ADH (and to a minor extent by cytochrome P450) and further to n-butyric acid by aldehyde dehydrogenase (ECETOC, 2003). Further oxidation of n-butyric acid produces CO_2. A minor conjugation pathway exists resulting in n-butanol-O-glucuronide or n-butanol-O-sulfate, which are excreted in the urine (Figure 3-1). In addition to exogenous sources of n-butanol, this alcohol is readily and rapidly metabolized from n-butyl acetate as shown in Figure 3-1.

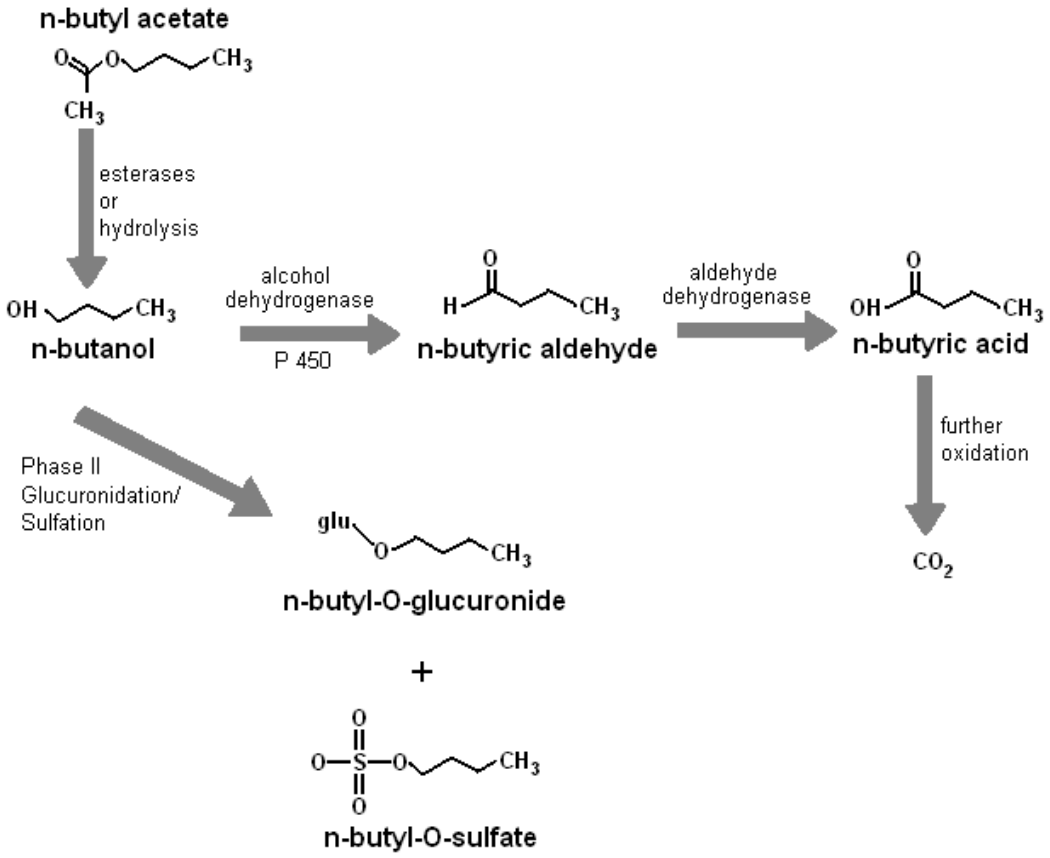

Figure 3-1 Metabolism of n-butanol.

Deisinger and English (2001) administered i.v. doses of 0.28 mmol/kg (21 mg/kg) of n-butyl acetate, n-butanol, or 0.028 mmol/kg (2.1 mg/kg) n-butyric acid to groups of adult male Sprague-Dawley rats. In addition, they administered an i.v. infusion of approximately 0.28 mmol/kg (21 mg/kg) n-butyric acid over 3 minutes. Blood samples were collected and analyzed for each of the butyl series compounds. Metabolism of n-butanol to n-butyric acid was very rapid with the peaks for both compounds (in the case of n-butyl acetate injection) measured within 1 minute of each other.

Poet et al. (2003a, unpublished and as presented and cited in Teeguarden et al., 2005) exposed male Sprague-Dawley rats to n-butanol in closed chambers having initial concentrations of approximately 2,000 ppm (6,000 mg/m^3). Blood was collected throughout the exposure and analyzed for n-butanol and n-butyric acid. Blood n-butanol levels remained at peak values (0.1 mM) from about 0.2 to 0.6 hours, suggesting that n-butanol metabolism was saturated during this period. n-Butyric acid levels peaked (0.009 mM) at about 0.6 hours and were typically an order of magnitude lower than n-butanol levels throughout the exposure.

In gavage studies in CD (Sprague-Dawley) rats dosed with 450 mg [^{14}C]-n-butanol/kg body weight, 83.3% of the administered radioactivity was metabolized via oxidative pathways, appearing in exhaled breath as CO_2 by 24 hours post exposure (DiVincenzo and Hamilton, 1979). Phase II glucuronidation and sulfation of n-butanol resulted in 4.4% of administered dose being excreted in the urine. Of this fraction, about 75% was in the form of n-butyl-o-sulfate (44%) or n-butyl-o-glucuronide (30%). Less than 1% was not metabolized and was eliminated in the exhaled breath as unchanged compound. The study authors reported similar metabolism and excretion patterns at lower doses (4.5 and 45 mg/kg body weight), but did not provide any additional quantitative details.

Metabolism of n-butanol by ADH from the perfusate of isolated rat liver was evaluated and an apparent Michaelis-Menten K_m (affinity constant) and V_{max} (maximum reaction velocity) were reported to be 0.86×10^{-3} M and 0.077 mmol/minute, respectively (Auty and Branch, 1976). When simultaneous exposures of n-butanol and ethanol were given, the V_{max} for n-butanol remain unchanged, but the K_m value increased to 1.2×10^{-3} M, indicating that ethanol competitively inhibits n-butanol metabolism.

The in vitro metabolism of n-butanol by rat hepatic microsomes has been studied by Teschke et al. (1974) and Cederbaum et al. (1979, 1978). Teschke et al. (1974) showed that hepatic microsomes catalyzed the oxidation of n-butanol to its aldehyde in a reaction requiring molecular oxygen and nicotinamide adenine dinucleotide phosphate (NADPH). This reaction was inhibited by carbon monoxide. Cederbaum et al. (1979) observed that hydrogen peroxide (H_2O_2) added to microsomal preparations stimulated the oxidation of n-butanol. Indirect evidence was further provided by the observation that azide, which prevents the decomposition of H_2O_2 by catalase, stimulated the oxidation of n-butanol. Thiourea, a compound that reacts with hydroxyl radicals, inhibited NADPH-dependent microsomal oxidation of n-butanol to a

similar extent, in both the absence and presence of the catalase inhibitor azide (Cederbaum et al. 1979).

Carlson and Olson (1995) evaluated the metabolism of n-butanol by rat hepatic and pulmonary cytosolic preparations measured with regard to ADH activity as influenced by pH and substrate concentration. The values are given in Table 3-1. At pH 10, the hepatic K_m value was about fourfold lower than at pH 7.2. V_{max} and K_m values could not be calculated for ADH activity in lung cytosol at pH 7.2 or 9.0 because activity was negligible under these conditions. These data suggest that oxidation of n-butanol in the lung may not contribute significantly to systemic metabolism.

Table 3-1. n-Butanol metabolism by hepatic or pulmonary ADH in male rats

pH	V_{max} (nmol/min/mg protein)	K_m (mM)
Hepatic		
7.2	13.2 ± 1.5	0.159 ± 0.085
9.0	15.9 ± 6.9	0.136 ± 0.051
10.0	9.2 ± 1.1	0.045 ± 0.013
Pulmonary		
7.2	ND	ND
9.0	ND	ND
10.0	20.2 ± 2.1	19.4 ± 7.4

ND = not determined due to low activity

Source: Carlson and Olson (1995).

Winer (1958) measured the initial reaction velocities of 19 alcohols as substrates for purified horse liver ADH. n-Butanol had the highest initial velocity of 215 moles/L/minute/mol ADH, which was 1.5-fold faster than the oxidation of ethanol (135 moles/L/minute/mol ADH).

Albano et al. (1991) investigated the role of cytochrome P450 2E1 in oxidizing n-butanol in vitro via a free radical intermediate. These authors incubated Sprague-Dawley rat liver microsomes with n-butanol in the presence of NADPH, desferrioxamine methane-sulphonate, and the spin trapping agent, 4-pyridyl-1-oxide-t-butyl nitrone, resulting in the detection of a free radical intermediate tentatively identified as the 1-hydroxylbutyl radical. The formation of the radical was strictly dependent of the presence of NADPH and oxygen and not influenced by the addition of mannitol. In reconstituted membrane vesicles, ethanol-inducible cytochrome P450 2E1 was twice as active as phenobarbital-inducible P450 2B1 in producing n-butanol free radicals. Indeed, n-butanol oxidation in rat liver microsomes was induced to a significantly greater (~25%) extent by pretreatment of the animals with ethanol than with phenobarbital. This suggests a greater affinity of n-butanol for cytochrome P450 2E1 compared to cytochrome P450

2B1 (Gadberry and Carlson, 1994). This inducible metabolism, however, was not observed in rat lung microsomes, indicating that P450-mediated oxidation of n-butanol in this tissue may be of minor consequence. Although cytochrome P450-mediated n-butanol oxidation has been demonstrated in rat liver, it is not clear to what extent this oxidation reaction has on systemic disposition of n-butanol.

Deters et al. (1998a) demonstrated that metabolism of n-butanol by ADH was not a necessary step in the liver toxicity of this compound. 4-Methylpyrazole (4-MP) was used to inhibit ADH in isolated perfused rat livers (from male Wistar rats) exposed to 130.2 mmol/L n-butanol. n-Butanol caused liver damage as determined by leakage of glutamate pyruvate transaminase (GPT), lactate dehydrogenase (LDH), and glutamate dehydrogenase (GLDH) into the perfusate and decreased oxygen consumption, perfusion flow, and adenosine triphosphate (ATP) concentration, both in the presence and absence of 4-MP. In contrast, ethanol induced liver toxicity was diminished by the addition of 4-MP. This study indicates that the hepatotoxicity of n-butanol is not related to metabolism by ADH. This study is further described in Section 4.5.5 (Mechanistic Studies Evaluating Liver and Metabolic Effects).

3.4. ELIMINATION

Deisinger and English (2001) administered i.v. doses of 0.28 mmol/kg (21 mg/kg) of n-butyl acetate, n-butanol, or 0.028 mmol/kg (2.1 mg/kg) n-butyric acid to groups of adult male Sprague-Dawley rats. In addition, they administered an i.v. infusion of approximately 0.28 mmol/kg (21 mg/kg) n-butyric acid over 3 minutes. Blood samples were collected and analyzed for each of the butyl series compounds. n-Butanol exhibited biphasic elimination and approached background levels by 18 minutes.

Astrand et al. (1976) exposed 12 volunteers (all male) to 300 or 600 mg/m^3 (100 or 200 ppm) n-butanol in air for four 30-minute periods of rest or exercise. By 30 minutes after cessation of exposure, the peak blood n-butanol level of 0.17 mM had diminished to near zero.

DiVincenzo and Hamilton (1979a) administered [^{14}C]-n-butanol in corn oil by gavage to male CD (Sprague-Dawley) rats at doses of 4.5, 45, or 450 mg/kg body weight. n-Butanol from a 450 mg/kg dose disappeared from the plasma rapidly, decreasing from a peak concentration of 70 µg/mL at 1 hour to <10 µg/mL at 2 hours and was below the limit of detection after 4 hours. Within 24 hours post exposure, excretion of the administered radioactivity was primarily as CO_2 in exhaled breath (78.3–83.3%). Of the remainder, 2.6–5.1% was eliminated in the urine, 0.6–1.1% was eliminated in the feces, and <1% of the administered radioactivity was exhaled as unchanged compound.

3.5. PHYSIOLOGICALLY BASED PHARMACOKINETIC MODELS

A physiologically based pharmacokinetic (PBPK) model for n-butyl acetate and its butyl metabolites (including n-butanol) was developed by Barton et al. (2000) and then later refined by

Teeguarden et al. (2005). The model simulates the kinetics of n-butyl acetate, n-butanol, n-butyraldehyde, and n-butyric acid in the rat or human following i.v or inhalation exposures to n-butyl acetate or n-butanol. The PBPK model refined by Teeguarden et al. (2005) was updated from ACSL to ACSLXTREME (Advanced Continuous Simulation Language, Aegis, Inc., Huntsville, Alabama) by U.S. EPA. Details of the model evaluation are presented in Appendix D. A schematic of the Teeguarden et al. (2005) model is shown in Figure 3-2.

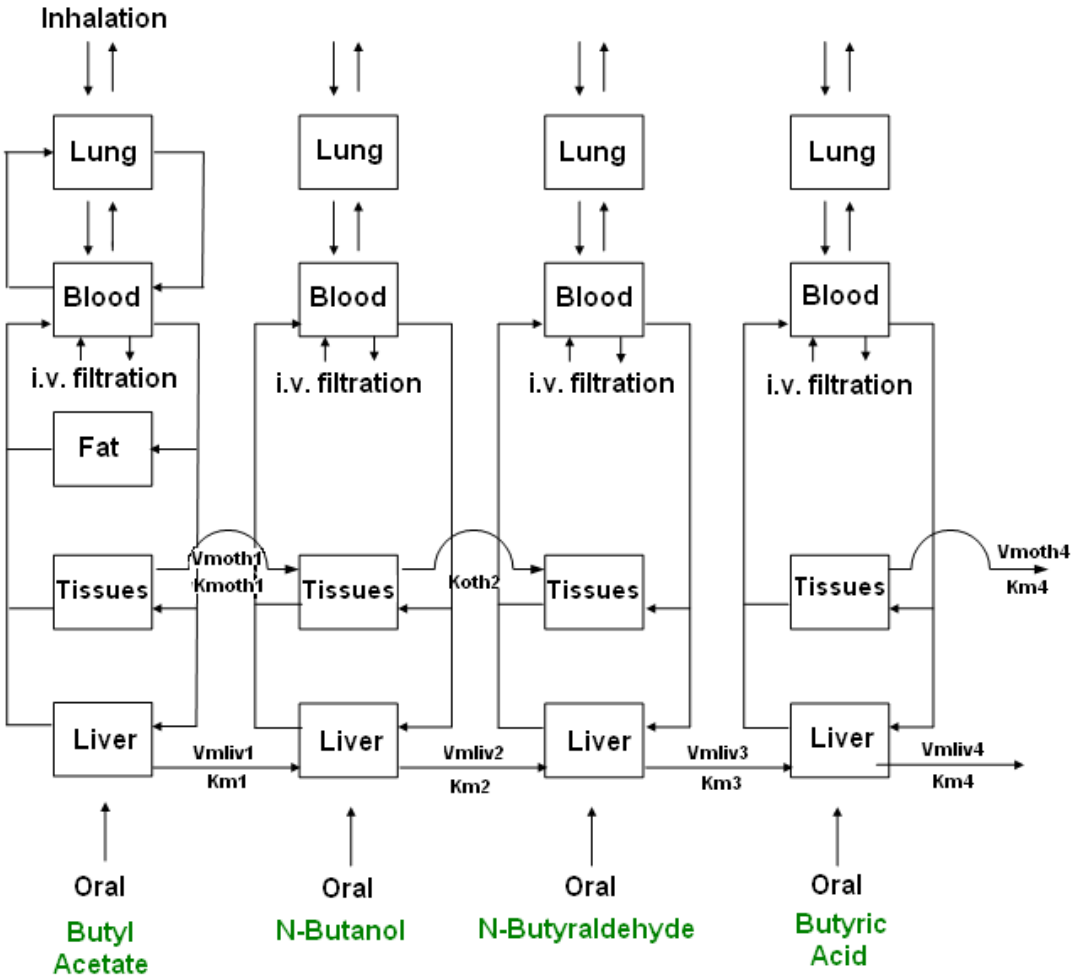

Source: Teeguarden et al. (2005).

Figure 3-2. Schematic of the PBPK model for the butyl series (including n-butanol) in rats and humans.

The model is comprised of four similar submodels for each component of the butyl series. The submodels are linked to one another via passage of the metabolite formed in the compartments for liver, blood, or extra-hepatic tissues to the respective compartments of the submodel for that metabolite. For example, the amount of n-butanol formed from n-butyl acetate in the liver is passed along to the liver compartment for the n-butanol submodel. The overall structure of linked submodels for the butyl series is based on the structure developed by Barton et al. (2000) for families of metabolically-related compounds.

Each submodel includes compartments for lung, arterial and venous blood, liver, and the remaining perfused tissues. The submodel for n-butyl acetate also includes a compartment for fat. All compartments are well-mixed and flow-limited, which assumes that compounds are homogeneously distributed in each compartment and that the equilibration of chemical concentration between the blood and tissues occurs sufficiently fast so that changes in concentration at the blood:tissue interface are limited by the blood flow rather than rate of diffusion into the tissues. The proportion of chemical transferred from blood to tissue (and vice versa) at any given moment was estimated by in vitro derived equilibrium partition coefficients. To determine the fraction of inhaled n-butyl acetate or n-butanol that bypasses extraction by the upper respiratory tract (because of the water-soluble nature of these compounds) and absorbed into the blood, bioavailability constants (FA1 and FA2) were estimated from in vivo data (discussed below) and multiplied by the inhaled concentration. Metabolism of each of the butyl series compounds in the liver, as well as n-butyl acetate and n-butyric acid in the other perfused tissues compartment, is described as Michaelis-Menten saturable processes defined by a maximum reaction rate (V_{max}), scaled to body weight to the ¾ power (mmol/hour/$kg^{0.75}$), and an affinity constant (K_m, mM). First-order metabolism of n-butanol in the other perfused tissues is scaled to body weight to the ¼ power (K_{other}, $kg^{0.25}$/hour) and was required to attain fit of the model to experimental data. Elimination of n-butyl acetate, n-butanol, and n-butyric acid via the urine (filtration) is represented as a first-order process, scaled to body weight to the ¼ power ($kg^{0.25}$/hour).

Physiological model parameters such as cardiac and pulmonary ventilation flow rates, relative blood perfusion of various tissue compartments, and tissue volumes (as fraction of body mass) for rats and humans were obtained from the literature (Teeguarden et al., 2005) and are shown in Table 3-2. Urinary elimination rate constants for rats were estimated based on literature values. Urinary clearance of 2-butanol was reported to be up to 14% in different species (Dietz et al., 1981). Thus, a value of 30 $hour^{-1}$, scaled to ¼ power of body weight, was used for the first-order n-butanol urinary elimination rate constant. In the absence of urinary excretion data for n-butyric acid, it was assumed to be <3.5%, as observed for isobutyric acid in the rat (DiVincenzo and Hamilton, 1979b). Human values were allometrically scaled from rat values. Rat values for the inhalation bioavailability factors were fitted to in vivo time-course data for the blood levels of n-butyl acetate (Poet et al., 2003a) and n-butanol (Poet et al., 2003b).

The human value for n-butyl acetate was assumed to be equal to the rat, while the value for n-butanol (59% of alveolar ventilation) was reported by Astrand et al. (1976).

Table 3-2. Physiological parameters for a PBPK model for the n-butyl series in the rat and human

Parameter	Abbreviation	Value		Reference
		Rat	Human	
Body weight (kg)	BW	0.3	70.0	Study specific
Alveolar ventilation ($L/hr/kg^{0.75}$)	QPC	14.0	8.678	Brown et al., 1997
Cardiac output ($L/hr/kg^{0.75}$)	QCC	14.0	12.892	Brown et al., 1997
Blood flow (percentage of cardiac output)				
Fat	QFatC	0.07	0.052	Brown et al., 1997
Liver	QLivC	0.175	0.227	Brown et al., 1997
Tissue volume (percentage of body weight)				
Arterial blood	VABC	0.022	0.0257	Benareggi and Rowland, 1991 (as cited in Teeguarden et al., 2005)
Fat	VFatC	0.07	0.214	Brown et al., 1997
Liver	VLivC	0.037	0.026	Brown et al., 1997
Lung	VLungC	0.005	0.008	Brown et al., 1997
Venous blood	VVBC	0.045	0.0514	Bernareggi and Rowland, 1991 (as cited in Teeguarden et al., 2005)
Other tissues	VOthC	0.751	0.5319	Brown et al., 1997
Urinary elimination rate ($kg^{0.25}/hr$)				
n-Butyl acetate	kFiltC1	0.074	Scaled[a]	Estimated
n-Butanol	kFiltC2	22.2	Scaled	Estimated based on Dietz et al., 1981
n-Butyric acid	kFiltC4	0.0074	Scaled	Estimated based on DiVincenzo and Hamilton, 1979b
Inhalation absorption (percentage of inhaled concentration)				
n-Butyl acetate	FA1	1.0	1.0	Rat, fitted; human = rat
n-Butanol	FA2	0.5	0.59	Rat, fitted; human = rat (Astrand et al., 1976)
n-Butyraldehyde	FA3	–	–	–
n-Butyric acid	FA4	–	–	–

[a]Allometrically-scaled rat value used for human.

Source: adapted from Teeguarden et al. (2005).

Metabolic parameter values for the model are given in Table 3-3. Metabolic constants (V_{max} and K_{other}) were estimated by visually fitting the model output to i.v. blood time-course data for each compound (Deisinger and English, 2001). Fitting of V_{max} for n-butyl acetate and its metabolites was preceded by first estimating V_{max} for the furthest downstream metabolite (n-butyric acid), and proceeding upstream to estimates V_{max} values for n-butyraldehyde, n-butanol, and n-butyl acetate, in that order. n-Butyraldehyde is not detected in blood and thus,

metabolic constants for this compound were approximated by n-butyric acid concentration in blood following n-butanol or n-butyl acetate exposure. The affinity constants (K_m) for n-butanol, n-butyraldehyde, and n-butyric acid were previously selected by Barton et al. (2000). The in vitro affinity constant for metabolism of ethyl acetate in rats was used as a surrogate for n-butyl acetate in blood, liver, and other tissues. Metabolic constants for n-butanol metabolism were re-optimized to data and updated values are given in Table 3-3.

Table 3-3. Metabolic parameters for a PBPK model for the n-butyl series in the rat and human[a]

Parameter	Abbreviation	Value	Notes
n-Butyl acetate			
Maximum metabolic rate in blood	VMBloodC1	600.0	Fitted
Affinity constant in blood	KMBlood1	100.0	K_m for ethyl acetate in rat
Maximum metabolic rate in liver	VMLivC1	38.7	Fitted
Affinity constant in liver	KMLiv1	1.0	K_m for ethyl acetate in rat
Maximum metabolic rate in other tissues	VMOthC1	6,000.0	Fitted
Affinity constant in other tissues	KMOth1	100.0	K_m for ethyl acetate in rat
n-Butanol[b]			
Maximum metabolic rate in liver	VMLivC2	2.17/0.62	Fitted (rat/human, respectively)
Affinity constant in liver	KMLiv2	0.16	Fitted
First-order metabolism in other tissues	KOthC2	4.0/20.1	Fitted (rat/human, respectively)
n-Butyraldehde			
Maximum metabolic rate in liver	VMLivC3	17.78	Fitted
Affinity constant in liver	KMLiv3	0.1	Estimated (Barton et al., 2000)
n-Butyric acid			
Maximum metabolic rate in liver	VMLivC4	1.4	Fitted
Affinity constant in liver	KMLiv4	0.1	Estimated (Barton et al., 2000)
Maximum metabolic rate in other tissues	VMOthC4	3.0	Fitted
Affinity constant in other tissues	KMOth4	0.1	Estimated (Barton et al., 2000)

[a]Rat values were derived as described; human values were allometrically scaled from rat values as ¾ or ¼ power of body weight. Units: V_{max} (mmol/hour/$kg^{0.75}$); K_m (mM); K_{other} ($kg^{0.25}$/hour).
[b]Values for n-butanol re-optimized. Details are presented in Appendix D.

Source: Teeguarden et al. (2005).

Blood:air and tissue:blood equilibrium partition coefficients (Table 3-4) for n-butyl acetate and n-butanol were calculated by Kaneko et al. (1994); values for n-butyraldehyde and n-butyric acid were assumed to be identical to those for n-butanol. The values for lung and other perfused tissues:blood were based on the Kaneko et al. (1994) muscle:blood value. Human values were assumed to be equivalent to rat values.

Table 3-4. Equilibrium partition coefficients for a PBPK model for the n-butyl series in the rat and human[a]

Parameter	Abbreviation	n-Butyl acetate	n-Butanol	n-Butyraldehyde	n-Butyric acid
Blood:air	PB	89.4	1,160.0	1,160.0	1,160.0
Fat:blood	PFat	17.0	–	–	–
Liver:blood	PLiv	3.14	1.08	1.08	1.08
Lung:blood	PLung	1.76	0.78	0.78	0.78
Other perfused tissues:blood	POth	1.76	0.78	0.78	0.78

[a]Calculated from Kaneko et al. (1994).

Source: Teeguarden et al. (2005).

The model was evaluated against experimental data for i.v. exposures in the rat (Deisinger and English, 2001), closed-chamber inhalation exposures in the rat (Poet et al., 2003a), and inhalation exposure in volunteers (Astrand et al., 1976). Low residual errors between model and data were observed (particularly for rat i.v. data of n-butanol), suggesting high confidence in the estimation/choice of metabolic and urinary elimination parameter values. For the human model, the simulated blood levels were within two standard errors of the observations and were always less than twofold higher. The profile of the simulated elimination of n-butanol from the blood was similar to observations. Further discussion regarding the model fit and parameter optimization can be found in Appendix D.

Overall, the human and rat models in Teeguarden et al. (2005) were developed for inhalation exposures. The internal dose metric available for extrapolation between species is limited to n-butanol levels in blood. Only n-butanol blood concentration data are available for both rats and humans. The human model performance has not been verified for other metabolites. Further, the liver is the only defined organ system (other than blood) for which the model may provide quantitative internal dosimetry. The model cannot be used to explicitly extrapolate internal doses for other target organs (i.e., central nervous system [CNS], reproductive organs, and upper respiratory system). However, for species differences in toxicity due primarily to n-butanol metabolic differences, resulting in differences in systemic levels of n-butanol or metabolites, the model is useful to quantitatively reduce uncertainty in the determining human equivalent concentrations (HECs) of critical rat exposures.

4. HAZARD IDENTIFICATION

4.1. STUDIES IN HUMANS

4.1.1. Oral Exposure

Bunc et al. (2006) described the case of a 47-year-old man who apparently ingested n-butanol in a suicide attempt. Initial symptoms of sleepiness, headache, and abdominal pain later progressed to vomiting and coma. The patient was transported to a hospital comatose, where his presenting symptoms included tachycardia, hypotension, shallow breathing, hypotonic muscles, absent myotatic reflexes, and aromatic odor. Echocardiogram and chest x-ray results were normal. A brain CT scan performed when the patient arrived at the hospital showed a distorted and narrower fourth ventricle and a hypodense area; an additional scan performed 10 hours later showed no changes. The patient regained consciousness approximately 16 hours after admission. Initial (days 1–2) blood laboratory tests conducted on the patient showed elevated erythrocytes and leukocytes, elevated creatinine, myoglobin, and creatine kinase; these changes were resolved by day 6 after arrival at the hospital. The cause of his symptoms was determined only after analysis of his stomach contents and urine, which showed the presence of n-butanol. No information on the dose of n-butanol ingested was provided in the report and no follow-up information was available.

4.1.2. Inhalation Exposure

Several studies reported health effects in workers occupationally exposed to n-butanol. Details of these studies including study design, exposure, and effects are presented in Table 4-1. Findings associated with n-butanol exposure in the workplace included eye irritation, hearing loss, dermatitis, and other systemic effects. The available human studies have limitations, including co-exposure to other solvents, lack of reporting of exposure and effect levels, lack of study details, and small sample sizes that prevent their use in establishing dose response relationships and effect levels. Specifically, exposure to other solvents was reported in Tabershaw et al. (1944) and Cogan et al (1945) and effect levels for n-butanol were not reported in Velazquez et al. (1969) and Sterner et al. (1949). Several of the studies (Chen et al., 1999; Jang et al., 1999; Akhmadeyeva, 1993; Bleecker et al., 1991; Murata et al., 1991) did not report any quantitative estimates of exposure to individual compounds. In three of the occupational studies that quantified exposure to individual compounds and included health effect information (Tucek et al., 2002; Triebig et al., 1992; Angerer and Wulf, 1985), exposure to n-butanol was significantly smaller (less than 5% of the total exposure where quantified) compared with exposure to other solvents such as xylenes, ethylbenzene, toluene, and/or acrylates. In Tabershaw et al (1944) and Cogan et al (1945), exposure to n-butanol was substantial (e.g. 30% or greater of the total exposure) however there were co-exposures and lack of information on the

worker population. There are also several controlled acute exposure studies that evaluated irritation and conditioned reflexes in humans during n-butanol exposure. These studies are summarized in Table C-1 in Appendix C.

Table 4-1. Occupational studies with n-butanol exposure

Reference(s)	Number of subjects	Study design	Exposure	Findings	Study limitations
Tabershaw et al., 1944	Not reported	Eye irritation, dermatitis, and systemic effects were evaluated in workers from six industrial facilities involved in the manufacture of raincoats and other waterproof materials, in which n-butanol was the primary solvent used.	5–14 ppm (15–42 mg/m^3) and 20–65 ppm (61–197 mg/m^3)	Eye irritation reported at a concentration ranging from 20 to 65 ppm (61–197 mg/m^3) in one out of six facilities with n-butanol only.	No details of the worker populations were provided. Other solvent exposures reported in four out of six facilities.
Velazquez et al., 1969	11 butanol + noise (72–78 db), 47 noise only (90–110 db)	Audiologic effects of n-butanol-exposed workers were compared with workers from another factory exposed to higher noise levels but not n-butanol or other solvents associated with hearing loss.	80 ppm (242 mg/m^3) as measured by gas chromatography (GC) in the work room at a cellulose acetate ribbon factory	Hearing loss was observed in 9/11 workers exposed to n-butanol and in 23/47 workers without exposure to n-butanol but with exposure to industrial noise.	The effect levels and sampling protocol for measurement of n-butanol was not described.
Cogan et al., 1945	75 female workers	Eye examinations were performed on symptomatic workers employed at a facility reported in the Tabershaw study.	15–100 ppm (46–303 mg/m^3) ethanol and diacetone alcohol (concentrations unknown)	Twenty-eight of 35 workers exposed to n-butanol exhibited evidence of corneal inflammation and no unexposed workers showed signs of inflammation.	Exposure to multiple solvents. No effect levels were reported.
Sterner et al., 1949	16 male workers	Physical examinations of workers exposed to n-butanol during coating of photographic paper over a 10-yr period were conducted.	Initial concentrations of n-butanol averaged 200 ppm (606 mg/m^3), but decreased to 100 ppm (303 mg/m^3) over the course of the study	Workers exposed to n-butanol concentrations averaging ≥200 ppm (606 mg/m^3) were reported to experience corneal edema and mild edema of the conjuctiva.	Only four subjects remained in the study at 10 yrs.

Table 4-1. Occupational studies with n-butanol exposure

Reference(s)	Number of subjects	Study design	Exposure	Findings	Study limitations
Angerer and Wulf, 1985	31 exposed and 31 controls	Study compared hematology findings in varnish workers from six different workplaces (within two plants) with those of matched controls. Exposure to n-butanol was reported at only one workplace, with eight workers.	Air contaminants at the only workplace with butanol exposure (1.2 ± 0.8 mL/m^3) included o-, m-, and p-xylenes (averaging 3.4, 11.7, and 4.3 mL/m^3, respectively) and ethylbenzene (7.5 mL/m^3).	Hematology results pooled across the six locations suggested statistically significant reductions in erythrocyte count and hemoglobin content, increased lymphocyte count, and reduced (not statistically significantly) segmented granulocyte count.	Exposure to multiple solvents; n-butanol was not detected in blood of workers at the workplace where it was measured in air; however, xylenes and ethylbenzene were detected in blood.
Bleecker et al., 1991	187 exposed	Cross-sectional study compared neurobehavioral findings in paint manufacturing workers across quartiles of total hydrocarbon exposure.	Exposures included toluene, xylene, aliphatic and aromatic hydrocarbons, methyl ethyl ketone, other hydrocarbons, alcohols (including n-butanol), ketones, and esters.	Statistically significant correlation (by linear regression analysis) between increasing exposure to mixed organic solvents and impairment of performance on several neuropsychological test outcomes, as well as vibration threshold.	Exposure to multiple solvents; exposure measured as “lifetime average weighted exposure” to total hydrocarbons; no quantitative information on individual compounds was provided.
Murata et al., 1991	11 exposed and 11 controls	Study compared neurological findings in workers with solvent exposure with age-matched controls.	Only one of the workers reported exposure to n-butanol; this individual also reported exposure to xylene, methanol, and toluene.	Coefficient of variation in electrocardiographic RR-intervals was statistically significantly reduced, and the distribution of nerve conduction velocities were slowed in exposed workers compared with controls.	No quantitative measures of exposure reported.

Table 4-1. Occupational studies with n-butanol exposure

Reference(s)	Number of subjects	Study design	Exposure	Findings	Study limitations
Triebig et al., 1992	83 exposed and 42 controls	Study compared subjective symptoms of neurotoxic endpoints in spray painters with controls.	Spray painters were from 10 different work sites; air concentrations of several solvents were reported for each work site. Four sites had n-butanol measurements (5.7, 1.5, 5.4, and >300 mg/m^3); the number of spray painters at each site was not reported. At the sites with n-butanol exposure, there was co-exposure to other solvents including toluene, xylene, ethylbenzene, styrene, acetone, butylacetate, methyl isobutylketone, ethyl acetate, n-heptane, and/or decane.	No difference in the prevalence of subjective symptoms of neurotoxicity between painters and controls.	Exposure to multiple solvents. Data pooled across all work sites, including those who had n-butanol exposure and those who did not.
Akhmadeyeva, 1993	347 exposed and 1,526 controls	Study compared health, physical development, and immunologic and psychochemical indices in blood of newborns of petrochemical workers with those of control infants.	Workplace air contaminants reportedly included aromatic hydrocarbons, isopropylbenzene, ethanol, and butanol.	Newborns of workers had higher frequency of delayed intrauterine development (24.2 versus 13.7% in controls; $p < 0.01$). Other differences between study and control newborns included hematological and immunological effects.	Exposure to multiple solvents. Brief report; no information on study design. No quantitative measure of exposure; no quantitative information on effects other than intrauterine developmental delay.

Table 4-1. Occupational studies with n-butanol exposure

Reference(s)	Number of subjects	Study design	Exposure	Findings	Study limitations
Chen et al., 1999	309 exposed (mortality study) 260 exposed and 539 controls (neuro-psychology study)	Mortality study and cross-sectional study of self-reported neuro-psychological symptoms in dockyard painters and unexposed controls. Mortality analysis included 309 painters comprising 3,690 person-yrs at risk. Cross-sectional study of neuro-psychological symptoms included 260 surviving painters and 539 unexposed controls.	According to the authors, primary solvents used at dockyard were white spirit, xylene, trimethylbenzene, n-butanol, trichloroethylene, naphtha, and cumene; exposures to other compounds were also reported to be likely.	Neither proportional mortality nor standardized mortality ratios for cancers or diseases of the CNS, circulatory system, or respiratory system were increased in painters. Cross-sectional study suggested increased prevalence of neuropsychological symptoms in painters compared with controls; relative risk for these symptoms increased with yrs of exposure.	Exposure to multiple solvents. Exposures characterized only by yrs as a dockyard painter; no quantitative measures of exposure.
Jang et al., 1999	674 exposed and 191 controls	Study compared neuropsychological effects (measured via questionnaire and function tests) in shipyard workers exposed to solvents and unexposed controls.	Primary solvents were xylene, ethylbenzene, trimethylbenzene, toluene, 2-ethoxyethanol, and 2-ethoxyethyl acetate (constituted 85% of total exposure "intensity"). n-Butanol reported as one of several other solvents detected.	Rate of abnormal neuropsychological diagnosis (primarily executive dysfunction, attention dysfunction, memory disorder, or functional disorder) was >4 times higher in the exposed workers compared with controls (9.3 versus 2.1% in controls, $p < 0.01$). Rate of abnormal diagnosis exhibited dose-response relationship with cumulative exposure.	Exposure to multiple solvents. Exposure quantified as "exposure intensity", a metric that incorporated environmental (total solvent concentrations) and/or biological measures (urinary metabolites of the primary solvents) as well as duration in certain job categories.

Table 4-1. Occupational studies with n-butanol exposure

Reference(s)	Number of subjects	Study design	Exposure	Findings	Study limitations
Tucek et al., 2002	60 exposed and 60 controls	Prospective cohort study of workers at a chemical facility producing acrylic acid. Study examined health effects including hematology, serum chemistry, serum immunity and tumor markers, spirometry, and cytogenetic analysis of peripheral lymphocytes.	Exposures included acrylonitrile, n-butanol, butyl acrylate, ethyl acrylate, methyl acrylate, methyl methacrylate, toluene, and styrene. Measurements of the various solvents (measured using personal air sampling) were binned by concentration and reported using stacked bar charts; these charts suggested that >70% of n-butanol concentrations were <0.02 mg/m^3. Exposures to the other compounds were of a similar magnitude and generally lower than occupational health limits in the Czech Republic; butyl acrylate was most frequently (at 2.1% of measurements) measured at a level exceeding its limit.	Statistically significantly higher percentage of chromosomal aberrations in peripheral lymphocytes.	Exposure to multiple solvents.

4.2. SUBCHRONIC AND CHRONIC STUDIES AND CANCER BIOASSAYS IN ANIMALS—ORAL AND INHALATION

4.2.1. Oral

Research Triangle Institute (RTI, 1985, unpublished) exposed groups of 30 male and 30 female rats to n-butanol (purity not reported, in deionized water) via daily gavage at doses of 0, 30, 125, or 500 mg/kg-day for 13 weeks. Daily observations for mortality and clinical signs, and weekly measurements of body weight and food consumption were made. Ophthalmological endpoints of toxicity (specific tests not reported) were evaluated before exposure and during the final week of exposure. Blood and urine samples were collected from rats (10 rats/sex/group) at the end of 6 weeks of exposure and at terminal sacrifice (at the end of 13 weeks of exposure) for assessment of hematology (hematocrit, hemoglobin, red blood cells [RBCs], mean cell volume, mean cell hemoglobin, mean cell hemoglobin concentration, total and differential leukocyte count, platelet count), clinical chemistry (alkaline phosphatase [ALP], blood urea nitrogen, alanine aminotransferase [ALT], aspartate aminotransferase [AST], glucose, total protein, albumin, total bilirubin, electrolytes, inorganic phosphate, CO_2, total cholesterol, and creatinine), and urinalysis parameters (pH, specific gravity, glucose, protein, ketones, bilirubin, urobilinogen, and sediment microscopy). All animals were subjected to gross necropsy. Organ weights (brain, heart, liver, spleen, kidneys, adrenals, thyroid with parathyroid, testes with epididymides, and ovaries) were recorded for animals sacrificed after 13 weeks but not those sacrificed after 6 weeks of exposure. Comprehensive histopathologic examination (>30 tissues) was performed on control and high-dose animals; in addition, the liver, kidneys, heart, and gross lesions were examined in the low- and mid-dose groups. The available copy of the unpublished report was lacking data tables and appendices. The original microfiche for the Toxic Substances Control Act Test Submissions (TSCATS) also lacked the data tables and appendices; thus, the summary provided herein is based on the text of the report.

No n-butanol-treatment related deaths occurred in these rats. Three animals (one mid-dose and two high-dose animals) died prior to sacrifice due to gavage errors (RTI, 1985, unpublished). There were no statistically significant changes in body weight, food consumption, or ophthalmoscopic findings. Clinical signs of toxicity, specifically hypoactivity and ataxia, were observed in high-dose animals but not in animals at lower doses. These signs were first observed during week 8, infrequently through week 10, and reached maximum incidence (29% for hypoactivity and 32% for ataxia) during weeks 11–13 (no other details provided). The study authors reported that these effects were evident 2–3 minutes after dosing and lasted for <1 hour.

At the interim sacrifice, hematology analysis showed reduced hematocrit, erythrocyte count, and hemoglobin content (5% lower than controls) in 500 mg/kg-day females. No hematological changes were evident in males at interim sacrifice or in either sex at terminal sacrifice. There were higher absolute neutrophil count in mid-dose males at interim evaluation and higher relative segmented neutrophil count and lower relative lymphocyte count in low-dose

females at final evaluation. The study authors also reported the following statistically significant serum chemistry and urinalysis changes that were described as "small", occurring in one sex and at one evaluation only, and without a dose-response relationship; lower cholesterol in high-dose males at interim evaluation and higher urine pH in low-dose males at the interim evaluation and in low-dose females at final evaluation. High-dose males exhibited a 14% increase in average thyroid weight compared with controls; no other statistically significant organ weight changes were reported. The report indicated that there were no treatment-related gross or microscopic pathology findings; however, the lack of data tables precluded independent review of the data.

The study authors did not identify effect levels, but indicated that no treatment-related effects were seen at 30 or 125 mg/kg-day. Based on the available information, U.S. EPA identified a lowest-observed-adverse-effect level (LOAEL) of 500 mg/kg-day based on neurotoxic signs (hypoactivity and ataxia) and reduced hematocrit, erythrocyte count, and hemoglobin content in females. The no-observed-adverse-effect level (NOAEL) is 125 mg/kg-day.

Groups of 15 male Wistar rats (5 weeks of age at study commencement) were exposed to n-butanol (purity not reported) in drinking water (0 or 6.9% v/v; approximate saturation limit) for up to 3 months in a study was designed to investigate whether mitochondrial effects observed with exposure to ethanol are also evident after exposure to other alcohols (Wakabayashi et al., 1991). This exposure concentration corresponds to an estimated dose of 8,200 mg/kg-day[1] based on default estimates of body weight (0.217 kg) and water intake (32 mL/day) (U.S. EPA, 1988) and a chemical density of 810 mg/mL for n-butanol (HSDB, 2009). Groups of 3–4 animals were sacrificed at various intervals; the first sacrifice occurred after 1 week of exposure. Toxicological evaluation was limited to electron microscopy of liver sections. Animals exposed to n-butanol and other alcohols reportedly exhibited poor appetite, weakness, and loss of body weight (no data provided). The study authors reported that there were no ultrastructural changes to hepatic mitochondria after n-butanol exposure up to 1 month; however, after 2 months of exposure, hepatic mitochondria were observed to be smaller and with poorly developed cristae. After 3 months of exposure, enlarged mitochondria with little or no cristae, and cup-shaped or elongated mitochondria were also observed. Other hepatic effects noted by the authors were proliferation of smooth endoplasmic reticulum and increased numbers of lysosomes and microbodies. The study authors proposed two possible mechanisms for the effects on mitochondria: fusion of adjacent mitochondria and suppression of the process of mitochondrial division via perturbation of protein synthesis. EPA did not identify a NOAEL or LOAEL for this study due to study design limitations (single high concentration used, only ultrastructural changes in the liver were examined, and the incidence and severity in exposed or control groups were not reported).

[1]Calculated by EPA as follows: 6.9% n-butanol = 0.069 mL/mL water × 810 mg/mL × 32 mL water/day × (1/0.217 kg) = 8,200 mg/kg-day.

Munoz et al. (1991, 1990) exposed groups of three male Wistar rats (initial weight 200–300 g) to drinking water or n-butanol in drinking water for 4 months in a study focused on examining effects on protein synthesis in the brain. The exposure concentration of n-butanol (purity not specified) was gradually increased from 1% (v/v) during the first week to 2% during week 2 and 4% for the remainder of the treatment period until sacrifice after 4 months. This exposure regimen corresponds to a time-weighted average concentration of 3.7%, resulting in an estimated dose of 4,400 mg/kg-day[2] based on default estimates of body weight (0.217 kg) and water intake (32 mL/day) (U.S. EPA, 1988) and a chemical density of 810 mg/mL for n-butanol (HSDB, 2009). Toxicological evaluations were limited to mortality, body weight, selected serum chemistry parameters (urea, glucose, creatinine, triglycerides, total proteins, albumin, and ALP), and in vitro protein synthesis in a cell-free translation system using brain extract. There were no mortalities during the study. Body weight gain for rats exposed to n-butanol for 100 days was 46% of the body weight gain observed in control rats. The authors reported that treated rats exhibited "signs of severe pathology" in several tissues, especially liver and kidney, but data were not provided and there was no information to indicate whether these organs were examined grossly or microscopically. Serum chemistry findings were reported without statistical analysis; however, group sizes were small (3/group). Treated rats had statistically significantly higher total protein (29% higher than controls) and albumin levels (28% higher). While not statistically significant, when compared with controls, the triglyceride level was higher (almost twofold) and ALP level was lower (20% of control) in treated rats. The study authors did not identify effect levels, and the information provided was inadequate for EPA to identify a LOAEL and NOAEL.

4.2.2. Inhalation

Korsak et al. (1994) exposed male Wistar rats (12/exposure group, 24 controls) to n-butanol (purity not specified) vapor concentrations of 0, 50, or 100 ppm (0, 154, or 308 mg/m^3) 6 hours/day, 5 days/week, for 3 months. Exposure concentrations, which were generated by heating the liquid solvent in a washer followed by dilution in air, were subsequently measured at 30-minute intervals using gas chromatography (GC)/flame ionization detection. Body weights were recorded weekly during the study. Terminal body weight and organ weights (heart, lungs, liver, spleen, kidneys, adrenals, and testes) were recorded. Rotorod performance tests, designed to assess neuromuscular function, were performed on rats before the initiation of n-butanol exposure, and monthly during the exposure period. Rats were placed on a horizontal wooden rod that rotated at a rate of 12 revolutions/minute and was placed at a height of 20 cm above the floor. Prior to n-butanol exposure, rats were trained on the rotorod task for 10 days and received a shock from the floor after falling to discourage voluntary jumps from the rod. Therefore,

[2]Calculated by EPA as follows: 3.7% n-butanol = 0.037 mL/mL water × 810 mg/mL × 32 mL water/day × (1/0.217 kg) = 4,400 mg/kg-day.

learned avoidance behavior (from the negative enforcement of the shock from the floor) in addition to neuromuscular function was evaluated in the rotorod task as designed by the authors.

Hot-plate behavior (latency of the paw-lick response) was tested after the 3-month exposure period. Blood samples were collected from rat tails before the exposure and 1 week prior to the termination of exposure and used for hematological evaluations (hematocrit, hemoglobin, erythrocyte count [RBC], and total and differential leukocyte counts). Clinical biochemistry studies (ALT, AST, sorbitol dehydrogenase, ALP, total protein, albumin, glucose, electrolytes) were performed on serum samples taken at sacrifice 24 hours after the last exposure. The livers were homogenized to analyze total microsomal cytochrome P450 content, aniline p-hydroxylase activity, triglyceride content, and malondialdehyde (MDA) content.

All rats survived and there were no clinical abnormalities observed in these rats (Korsak et al., 1994). Mean body weights of rats exposed to n-butanol were higher than controls (5–6%) during the first 2 months of the exposure period; during the 3rd month, average weights were higher (up to 7%), but not statistically significantly different from controls. There were no significant differences in absolute or relative organ weights. Table 4-2 shows changes in hematology and lipid peroxidation parameters. Compared to controls, the exposed groups exhibited decreased erythrocyte counts (5 and 16% lower in the 154 and 308 mg/m^3 groups, respectively); the difference was statistically significant in the 308 mg/m^3 group. Statistically significantly decreased hemoglobin levels (10% lower than controls) were noted in both exposure groups, but hematocrit was not changed. There were increased leukocyte counts (25 and 57% higher in the 154 and 308 mg/m^3 group, respectively); the difference was statistically significant in the 308 mg/m^3 group, and was beyond the normal range of variability (16.5 × 10^3/nm^3 in exposed rats, compared with a range of 1.96–8.25 × 10^3/nm^3; Giknis and Clifford, 2008). The leukocyte differential counts were not statistically significantly different among exposure and control groups, except for an increase (77% higher than controls) in the percentage of eosinophils in the 308 mg/m^3 group; this increase was well beyond the normal range (13.8%, compared with 0–2% for untreated male rats <6 months of age; Wolford et al., 1986). There were no statistically significant exposure-related changes in any measured serum chemistry parameters. Statistically significantly increased lipid peroxidation, as measured by increased MDA in hepatic microsomes, was noted in both exposure groups (16 and 30% higher than controls in the 154 and 308 mg/m^3 groups, respectively). Hepatic total cytochrome P450 content, microsomal aniline p-hydroxylase activity, and liver triglycerides were not affected by exposure to n-butanol.

Table 4-2. Hematological effects in rats exposed to n-butanol by inhalation for 3 months

	Control	154 mg/m^3 (50 ppm)	308 mg/m^3 (100 ppm)
Number of animals	24	12	12
Hemoglobin (g/dL)	15.9 ± 0.4[a]	14.2 ± 0.8[b]	14.1 ± 0.7[b]
Erythrocytes (× 10^6/nm^3)	9.97 ± 0.02	9.45 ± 0.05	8.35 ± 0.06[b]
Leukocytes (× 10^3/nm^3)	10.5 ± 0.13	13.1 ± 0.26	16.5 ± 0.27[b]
Eosinophils (%)	7.8 ± 2.3	11.5 ± 4.6	13.8 ± 4.6[c]
MDA (nmol/mg microsomal protein equivalent to g liver)	40.41 ± 2.10	46.68 ± 2.16[c]	52.45 ± 2.88[c]

[a]Mean ± standard deviation (SD).
[b]Significantly different from control at $p < 0.01$.
[c]Significantly different from control at $p < 0.05$.

Source: Korsak et al. (1994).

There were dose- and duration-related increases in the percentage of rotorod test failures, while there were no effects on pain sensitivity (assessed by hot-plate behavior) in the rats exposed to n-butanol at these concentrations. The rotorod data were presented in Korsak et al. (1994) in a graphical format; the failure rates, presented in Table 4-3, were digitally extracted from the graphs by EPA. The investigators reported that increased failure rates in the 308 mg/m^3 group were statistically significant during the second and third months of exposure; the changes in the low exposure group were not statistically significant at any time point. The failure rates in both exposed groups increased linearly with increasing duration of exposure. This increase over time indicates that there was no adaptation to treatment occurring within the study period and suggests that adaption would not occur if there was continued exposure. Sufficient detail (number of rotorod trials per animal) to consider pairwise comparisons were not reported by the study authors.

Table 4-3. Percentage of Rotorod test failures in rats exposed to n-butanol by inhalation over 3 months

Exposure group	Number of animals	Percentage of rotorod failures[a]		
		Month 1	Month 2	Month 3
Control	24	0	0	0
154 mg/m^3 (50 ppm)	12	2	10	16
308 mg/m^3 (100 ppm)	12	16	25[b]	34[b]

[a]Percentage of rotorod failures derived from digitally extracted from the graphs.
[b]Significantly different from control at $p < 0.05$.

Source: Korsak et al. (1994).

EPA identified NOAEL and LOAEL values of 154 and 308 mg/m^3, respectively, based on increases in the percentage of rotorod test failures in rats. Decreased hemoglobin and increased lipid peroxidation were both observed at the NOAEL; however, EPA judged the changes at that concentration not to be biologically significant.

Smyth and Smyth (1928) performed three experiments in which guinea pigs (at least three/group, sex unspecified) were exposed to n-butanol (purity not reported) vapor at a concentration of 100 ppm (300 mg/m^3) every day for 2 weeks (hours/day were not specified) and then for 4 hours/day, 6 days/week, for durations ranging from 1 to 2.5 months. The three groups were not exposed concurrently. There were two control groups (one sham-treated and one untreated), three animals per group (sex unspecified). The guinea pigs were weighed weekly. Blood counts and urinalysis (parameters not reported) were assessed prior to exposure and at biweekly intervals thereafter. The schedule and tests performed at sacrifice were not described. The study authors reported that there were no deaths among the first group treated for 64 exposures, but there was a decrease in erythrocyte as well as lymphocyte count. Of this group of three animals, two were reported to exhibit hemorrhagic areas in the lungs and transient albuminuria. The second group tested at this concentration developed severe skin infections after the 30th exposure, and two died during the 38th exposure. These animals also reportedly exhibited decreased erythrocytes and hemoglobin along with increased total leukocytes (data not provided). The surviving guinea pig gained weight and had a "decidedly improved blood picture" (details not provided) at sacrifice. The authors indicated that all three animals had "toxic degeneration" of the livers and kidneys (no further information given). The third experiment was continued for 28 exposures, and the authors reported similar changes in hematology (decreased erythrocytes and absolute and relative lymphocytosis) as well as central liver and marked renal degeneration (characterized by cloudy swelling of convoluted tubules, marked degeneration of tubules). Data on weight, hematology, and specific gravity of urine were reported for each of the three treated animals, but control data were not provided. In the two control groups, one animal each died of skin infection.

Rumyantsev et al. (1979; published in Russian and translated for this review) exposed rats and mice to butanol (isomer and purity not reported) via inhalation at concentrations of 0, 0.8, 6.6, or 40 mg/m^3 for 4 months (frequency not reported). This study did not provide other details of the study design (e.g., sex, strain, or number per group, or toxicological evaluations performed) or any quantitative information on the effects observed. The report provided a list of effects at each exposure concentration; the affected species was not reported in most cases. Increased thyroid gland activity reportedly occurred in all experimental groups. At 6.6 and 40 mg/m^3, narcosis induced by hexanal administration was shortened, there was an increase in the conditioned reflex activity, and the pituitary-adrenal system was characterized as disrupted. Other changes were noted such as a loss of CNS summation capacity (generally an electrophysiological measurement of nerve response), reduced eosinophilic response following

administration of adrenocorticotropic hormone, and reduced demand of oxygen in what was termed the "cold test." Finally, increased blood cholinesterase activity was observed in rats at ≥6.6 mg/m^3. The authors characterized the 6.6 mg/m^3 concentration as a threshold value and could be considered a LOAEL and 0.8 mg/m^3 is the NOAEL for the study. Although the authors provide effect levels for the study, there is no information on the study design, no data for the toxicological effects are available, and statistical information is not provided for the various endpoints. As a result, EPA considers the information reported in the publication as inadequate for the purpose of identifying effect levels.

4.3. REPRODUCTIVE/DEVELOPMENTAL STUDIES—ORAL AND INHALATION

4.3.1. Oral Studies

Sitarek et al. (1994) exposed female Wistar Imp:DAK rats (11–17/group) to n-butanol (purity not reported) in drinking water at concentrations of 0.24, 0.8, and 4%, estimated as 300, 1,000, and 5,000 mg/kg-day by the authors. A control group of 16 rats received plain tap water. Treatment was initiated at 10 weeks of age and continued for 8 weeks prior to mating. For 14 days prior to exposure and during weeks 4–5 and 7–8 of the premating exposure period, vaginal smears were collected daily for assessment of estrous cycle. The females were then mated to untreated males for up to 3 weeks. Gestation day (GD) 0 was defined as the day of sperm detection in vaginal smears. The females were exposed to n-butanol continuously through the mating and gestation periods. Weight gain, food consumption, and water intake were measured weekly in females that did not become pregnant and on GDs 3, 7, 10, and 17 in pregnant females. Upon sacrifice on GD 20, uterine contents (numbers of live and dead fetuses, numbers of early and late resorption sites) were evaluated. Body weight and crown-rump length of live fetuses were recorded. All live fetuses were examined for external malformations; half were then prepared for skeletal examination and the remainder for visceral examination. Statistical analysis of malformations was performed using either the fetus or the litter as the statistical unit.

All of the animals survived and treatment with n-butanol did not affect food or water consumption or body weight of female rats during the premating period (Sitarek et al., 1994). Mean daily intake of food and water by high-dose dams was lower than controls (10 and 9%, respectively), but the difference was not statistically significant. Mean body weight gain was 5% higher in high-dose dams compared with controls; the difference was not statistically significant. There were no differences in estrous cycle duration or duration of individual stages of the cycle. The study authors reported that hemoglobin concentration and hematocrit, as well as absolute and relative organ weights were not different between exposed and control dams; however, detailed data were not provided. Treatment with n-butanol did not affect the pregnancy rate, number of corpora lutea or total implants, number of litters with resorptions, or numbers of pre- or postimplantation losses/litter. A slight increase in the number of early resorptions/litter was

observed (twofold increase over control at the high-dose), but the difference from control was not statistically significant.

Table 4-4 shows the incidence of developmental effects in fetuses and litters. Mean fetal body weight was not affected by treatment, but mean fetal crown-rump length was statistically significantly decreased in offspring of high-dose dams compared with controls (5%). Statistically significant, dose-related increases in the litter incidences with any dilation (characterized as dilation of the subarachnoid space, cerebral ventricles (lateral and/or third ventricles of the brain), or renal pelvis (unilateral and bilateral)) were observed at all doses (Sitarek et al., 1994). The study authors also reported a statistically significant increase in dilation of the subarachnoid space and dilation of the lateral ventricle and/or third ventricle of the brain at ≥ 300 mg/kg-day and dilation of the unilateral and bilateral renal pelvis at 1000 mg/kg-day only. Specifically, increased litter incidence in the dilation of the lateral and/or third ventricle of the brain was increased by 8, 57, 67, and 78%, respectively. The incidence of litters with dilation of the subarachnoid space was also statistically significantly increased in a dose-related manner; 0, 14, 25, and 78%, respectively. The percentages of litters with internal hydrocephalus was statistically significantly increased at the mid- and high-doses (25 and 22%, respectively, compared with 0% in controls), while the percentage of litters with external hydrocephalus was statistically significantly increased at the mid-dose only (17% compared with 0% in controls). The authors reported that the percentage of fetuses with delayed ossification was increased at the high-dose; however, the percentage of litters affected was not different between controls and high-dose animals. The percentage of litters with an extra (14th) rib was statistically significantly higher in the group exposed to 5,000 mg/kg-day (11 versus 0% in controls); this occurred in two fetuses of a single litter at this dose. The authors did not determine effect levels. EPA identified 300 mg/kg-day (the lowest dose tested) as the LOAEL based on increased incidences of dilation of the subarachnoid space and dilation of the lateral and/or third ventricle of the brain in offspring; a NOAEL was not identified.

Table 4-4. Selected fetal developmental effects in offspring of rats exposed to n-butanol in drinking water for 8 weeks before mating and during gestation[a]

Parameter	n-Butanol dose in mg/kg-d (% in water)			
	0	300 (0.24%)	1,000 (0.8%)	5,000 (4.0%)
Fetal body weight[b] (g)	3.2 ± 0.2	3.2 ± 0.3	3.2 ± 0.2	3.2 ± 0.3
Fetal crown-rump length[b] (cm)	4.0 ± 0.1	3.9 ± 0.1	3.9 ± 0.1	3.8 ± 0.1[c]
No. of fetuses (litters) examined for visceral variations	61 (12)	73 (14)	71 (12)	51 (9)
Percentage of fetuses (litters) with dilation of:	2 (8)	25[c] (64)[c]	32[c] (83)[c]	41[c] (100)[c]
Subarachnoid space (%)	0	3 (14)[c]	10[c] (25)[c]	20[c] (78)[c]
Lateral ventricle and/or third ventricle of the brain (%)	2 (8)	23[c] (57)[c]	17[c] (67)[c]	25[c] (78)[c]
Unilateral renal pelvis (%)	0	0	7[c] (42)[c]	0
Bilateral renal pelvis (%)	0	0	4 (25)[c]	0
Percentage of fetuses (litters)with congenital defects:	0	0	7[c] (33)[c]	4 (22)[c]
External hydrocephalus (%)	0	0	3[c] (17)[c]	0
Internal hydrocephalus (%)	0	0	7[c] (25)[c]	4 (22)[c]
No. of fetuses (litters) examined for skeletal variations	65 (12)	81 (14)	75 (12)	51 (9)
Percentage of fetuses (litters) with delayed ossification:	15 (67)	16 (50)	24(58)	33[c] (67)
Percentage of fetuses (litters) with congenital defect:	0	1 (7)[c]	0	2 (11)[c]
14th rib (%)	0	0	0	2 (11)[c]
Wavy ribs (%)	0	1 (7)[c]	0	0

[a]Fetal and litter data were reported by study authors.
[b]Mean ± SD.
[c]Significantly different from control at $p < 0.05$.

Source: Sitarek et al. (1994).

Ema et al. (2005) also investigated the developmental effects (malformations and variations) of n-butanol in Sprague-Dawley rats. Pregnant (sperm positive) Sprague-Dawley (Crj:CD(SD)IGS) rats (20/group) were exposed to n-butanol (99.9% pure) in drinking water at concentrations of 0, 0.2, 1.0, or 5.0% on GDs 0–20. The authors estimated daily doses of 0, 316 ± 39, 1,454 ± 186, or 5,654 ± 1,402 mg/kg-day based on measured body weight and water consumption. Maternal evaluations included recording of clinical signs, body weights, and food and water intake. Dams were sacrificed on GD 20 for assessment of numbers of corpora lutea, implantation sites, resorptions, and live and dead fetuses; placental weight was also recorded. Live offspring were sexed, weighed, measured (crown-rump), and examined for external and oral malformations. Half of the fetuses were prepared for examination of internal malformations and the remainder for skeletal malformations. The study authors used the litter as the statistical unit for analysis of the data. Treatment-related findings are summarized in Table 4-5.

Table 4-5. Selected changes in rats exposed to n-butanol in drinking water on GDs 0–20

Parameter	n-Butanol dose in mg/kg-d (% in water)			
	0	316 (0.2%)	1,454 (1.0%)	5,654 (5.0%)
Maternal body weight gain on GDs 0–7 (g)[a]	44 ± 7	45 ± 7	40 ± 6	20 ± 28[b]
Maternal body weight gain on GDs 0–20 (g)[a]	162 ± 19	168 ± 16	165 ± 15	146 ± 16[b]
Maternal food consumption GDs 0–20 (g)[a]	548 ± 38	548 ± 46	503 ± 34[b]	441 ± 34[b]
Maternal water consumption GDs 0–20 (mL)[a]	930 ± 105	983 ± 126	890 ± 106	669 ± 182[b]
Male fetal body weight (g)[a]	4.18 ± 0.27	4.00 ± 0.24	4.04 ± 0.25	3.83 ± 0.18[b]
Female fetal body weight (g)[a]	3.97 ± 0.25	3.86 ± 0.20	3.83 ± 0.16	3.59 ± 0.17[b]
Skeletal examination[c]				
Total no. of litters examined	20	20	20	20
Total no. of litters with variations	11	12	17	20[b]
Short supernumerary ribs	10	9	16	19[b]
Degree of ossification				
No. of forepaw proximal phalanges	1.6 ± 1.3	1.6 ± 0.9	1.2 ± 1.1	0.3 ± 0.4[b]
Internal examination[c]				
Total no. of litters examined	20	20	20	20
Thymic remnant in neck	4	5	8	8

[a]Mean ± SD.
[b]Significantly different from control at $p < 0.01$ (litter as unit of statistical analysis).
[c]Nested data were not available; only litter data are presented

Source: Ema et al. (2005).

None of the animals in any group died. As shown in Table 4-5, maternal body weight gain in the group exposed to 5,654 mg/kg-day was statistically significantly decreased during GDs 0–7 (45% of controls) and GDs 0–20 (10% less than controls). Food consumption was statistically significantly decreased compared to controls in mid- and high-dose dams (8 and 20% lower than controls, respectively) throughout pregnancy. During GDs 0–7, water consumption was statistically significantly decreased at the mid- and high-doses (9 and 38% lower than controls), and was decreased throughout gestation in the high-dose dams (28% lower than controls over GDs 0–20).

There were no statistically significant differences between exposed and control rats in placental weight or numbers of corpora lutea, implantations, pre- or post implantation losses, resorptions, or live or dead fetuses (Ema et al., 2005). The sex ratio of offspring was not different among the groups. Fetal body weight was statistically significantly reduced in both male (8% lower than controls) and female (10%) offspring of dams exposed to 5,654 mg/kg-day. Body weights were decreased in the mid- and low-dose fetuses; however, the difference from control was not statistically significant. The crown-rump length of offspring was not affected by treatment.

The incidences of external, oral, and visceral malformations were not increased by treatment with n-butanol (Ema et al., 2005). At the highest dose, a statistically significant increase (20/20 versus 11/20 litters in controls) in the incidence of litters with skeletal variations (primarily short supernumerary ribs) was observed, as well as a decrease in the degree of ossification (number of forepaw proximal phalanges was 0.3 ± 0.4 versus 1.6 ± 1.3 in controls). The study authors suggested that the skeletal effects may have been related to growth retardation in the high-dose group. Although there was no statistically significant increase in the incidence of litters with internal malformations, the incidence of litters with thymic remnant in the neck increased with dose (see Table 4-5) and the incidence at the high-dose was twice that of controls (8/20 versus 4/20 litters in controls). The study authors did not identify a LOAEL for this study; however, they did indicate that the NOAEL for dams and fetuses was 1,454 mg/kg-day. EPA identified the high-dose (5,654 mg/kg-day, or 5% in water) as a LOAEL for developmental effects (decreased fetal body weight and increased incidence of skeletal variations). The NOAEL is 1,454 mg/kg-day (1%).

McLain (2008) summarized a teratogenicity study (published in Russian with a brief English summary, not translated for this review) by Bariliak et al. (1991) of n-butanol and other alcohols administered by gavage. According to McLain (2008), groups 10–16 white rats (weighing 160–180 g, strain not specified) were given various alcohols (methanol, ethanol, n-butanol, nonanol, and decanol; purity not given) by gavage (1 mL of 40% solution in water) from GDs 1 through 15. Controls (20 rats) were given water alone during the same gestational treatment period. Without information on the body weights of the pregnant rats, estimating a dose associated with the administered solution of n-butanol is uncertain. Assuming a body weight of 0.250 kg and chemical density of 810 mg/mL, a dose of 1,300 mg/kg-day[3] was estimated. At sacrifice on GD 20, the numbers of corpora lutea and live and dead fetuses were counted. The review did not discuss any maternal evaluations. Parameters reported in the secondary source include: fertility index (description not provided), number of implantations, percent pre- and post implantation losses, and number of live fetuses. In addition, ADH activity was measured in livers excised from selected fetuses (1–2/litter). According to McLain (2008), these measurements were performed daily on fetuses from GDs 16 to 21 and on postnatal days (PNDs) 1, 3, and 20.

Results of the study, as reported by McLain (2008), are shown in Table 4-6. According to the review, treatment with n-butanol resulted in statistically significant increases in the percents of pre- and post implantation losses and in total fetal deaths. A decrease in the fertility index of treated animals was reported in the review (6.5 versus 9.7% in controls; statistical analysis not reported). In addition, ADH activity in fetal livers, which was at its highest level on GD 20, was reduced 77.6% at this measurement in offspring of dams exposed to n-butanol. No

[3]Calculated by EPA assuming % v/v in water as follows: 40% n-butanol (in 1 mL) = 0.4 mL/day × 810 mg/mL × (1/0.250 kg) = 1,300 mg/kg-day.

other information was provided in the review or in the English summary in the publication. Effect levels were not provided in the review. Given the lack of information from which to estimate dose, as well as reliance on a secondary source for information, EPA has not identified effect levels for this study.

Table 4-6. Teratogenic observations in rats exposed to n-butanol by gavage during GDs 1–15

	Historical control	Control	1 mL of 40% n-butanol solution (dose estimated to be ~1,600 mg/kg-d)
Number of animals	362	20	10
Index of fertility	9.6	9.7	6.5
Number of corpora lutea	3,684	207	106
Number of implantations	3,668	203	83
Fetal deaths (%)	10.5 ± 0.5[a]	6.3 ± 1.7	38.7 ± 4.7[b]
Preimplantation	5.6 ± 0.4	2.0 ± 1.0	21.7 ± 4.0[b]
Postimplantation	5.2 ± 0.4	4.4 ± 1.4	21.7 ± 4.4[b]
Number of live fetuses	3,476	194	65

[a]Mean ± SD.
[b]According to the review, "all indices of the embryotoxic activity in the experimental groups are reliably higher than control ($p < 0.001$)".

Sources: Bariliak et al. (1991) as reported in McLain (2008).

4.3.2. Inhalation Studies

Nelson et al. (1989a) studied the developmental toxicity of n-butanol (≥99% pure) and other butanol isomers in rats exposed by inhalation. Groups of 15–20 sperm-positive female Sprague-Dawley rats were whole-body exposed to n-butanol vapor at nominal concentrations of 0, 3,500, 6,000, or 8,000 ppm (0, 11,000, 18,000, or 24,000 mg/m^3), 7 hours/day on GDs 1–19. Test concentrations were selected on the basis of pilot testing. In the pilot experiment, exposure to 27,000 mg/m^3 (9,000 ppm) n-butanol was lethal to two of six nonpregnant rats within 2 days, and exposure to 24,000 mg/m^3 (8,000 ppm) resulted in narcosis in half of tested dams. In the main study, dams were evaluated weekly for food and water intake, and body weight was measured on GDs 0, 7, 14, and 20. After sacrifice on GD 20, the numbers of corpora lutea, resorptions (early, middle, or late), and live fetuses were recorded. Fetuses were weighed, sexed, and examined for external malformations. Half of the fetuses were examined for skeletal malformations and the other half for visceral malformations.

In the highest exposure concentration of n-butanol, 2/18 dams died prior to sacrifice (Nelson et al., 1989a). There were no deaths in the low- or mid-exposure groups. The body weights of dams in the 24,000 mg/m^3 group were approximately 17% less than controls at termination (based on visual inspection of data presented graphically), although this difference

was not statistically significant when the authors adjusted for multiple comparisons using the Bonferroni technique. However, the body weights were slightly higher than controls in 11,000 and 18,000 mg/m^3 groups. Food consumption was lower in dams exposed to the mid- and high concentrations (11–19% lower than controls at 18,000 mg/m^3 and 10–17% lower at 24,000 mg/m^3); the difference from controls was statistically significant during all 3 weeks of treatment at the mid concentration and during the first week only at the high concentration. Water intake was reportedly higher in treated groups than in controls, but the difference was not statistically significant (data not reported).

Exposure to n-butanol had no effect on number of corpora lutea, resorptions or live fetuses/litter, or sex ratio. External malformations were not observed in any group. Statistically significant concentration-related reductions in body weight were observed in male and female fetuses at the mid- and high-exposure levels (12 and 24–27% lower than controls in the 18,000 and 24,000 mg/m^3 groups, respectively). The percent of fetuses having normal skeletal development was statistically significantly lower at 24,000 mg/m^3 n-butanol. The authors indicated that rudimentary cervical ribs were the primary skeletal malformation observed with n-butanol exposure but incidence data for the different exposures was not provided by the authors. Statistical analysis of the incidences of litters with skeletal or visceral malformations or variations was not reported in the study. Based on Fisher's exact tests performed by EPA for this review, the incidence of litters with skeletal malformations was increased at all concentrations and the incidence of litters with visceral malformations was statistically significantly increased at the highest concentration. Table 4-7 reports selected findings from the study. The authors did not identify effect levels. EPA identified the lowest concentration tested (11,000 mg/m^3 or 3,500 ppm) as a LOAEL based on the increased incidence of litters with skeletal variations; a NOAEL was not identified.

Table 4-7. Selected changes in rats exposed to n-butanol via inhalation on GDs 1–19

Parameter	n-Butanol exposure in mg/m^3 (ppm)			
	0	11,000 (3,500 ppm)	18,000 (6,000 ppm)	24,000 (8,000 ppm)
Mortality	0/17	0/15	0/18	2/18
Number pregnant/number bred	15/17	13/15	18/18	15/16
Maternal food consumption during wk 1 (g)	124 ± 15[a]	142 ± 17	102 ± 24[b]	103 ± 24[b]
Maternal food consumption during wk 2 (g)	134 ± 21	142 ± 16	108 ± 12[b]	118 ± 17
Maternal food consumption during wk 3 (g)	124 ± 16	133 ± 16	110 ± 9[b]	111 ± 17
Male fetal body weight (g)	3.4 ± 0.31	3.4 ± 0.18	3.0 ± 0.31[b]	2.6 ± 0.25[b]
Female fetal body weight (g)	3.3 ± 0.27	3.2 ± 0.18	2.9 ± 0.30[b]	2.4 ± 0.23[b]
Fetuses (litters) with skeletal malformations	0/102 (0/15)[c]	5/85 (4/12)[d]	8/129 (5/18)[d]	16/98 (9/15)[d]
Fetuses (litters) with skeletal variations	43/102 (14/15)	24/85 (11/12)	52/129 (17/18)	75/98 (–)[e]
Percent of fetuses with normal skeletal development	100 ± 0	94 ± 3	94 ± 3	85 ± 4[b]
Fetuses (litters) with visceral malformations	0/106 (0/15)	0/97 (0/13)	2/134 (2/18)	8/96 (4/15)[d]
Fetuses (litters) with visceral variations	7/106 (4/15)	8/97 (6/13)	6/134 (4/18)	19/96 (8/15)
Percent of fetuses with normal visceral development	100 ± 0	100 ± 0	99 ± 1	92 ± 4

[a]Mean ± SD.
[b]Significantly different from control at $p < 0.05$.
[c]Affected fetuses/fetuses examined (affected litters/litters examined).
[d]Significantly different from control at $p < 0.05$ by Fisher's exact test performed for by EPA.
[e]The study reported that 25 of 15 litters had skeletal variations. This was assumed to be a reporting error.

Source: Nelson et al. (1989a).

Nelson et al. (1989b) evaluated behavioral teratology in young rats following in utero or paternal inhalation exposure to n-butanol vapor. Groups of 15 pregnant female Sprague-Dawley rats were exposed to 0, 3,000, or 6,000 ppm (0, 9,000, or 18,000 mg/m^3) n-butanol for 7 hours/day on GDs 1–19 (termed "maternal exposure group" by the authors). Groups of 18 male Sprague-Dawley rats were exposed to the same concentrations of n-butanol for 7 hours/day for 6 weeks and then mated to non-butanol exposed females (termed "paternal exposure group" by the authors). On the day of birth (PND 0), offspring were culled to four males and four females per litter and fostered to untreated controls. Individual pup weights were recorded weekly for 5 weeks. On PND 10, one male and one female pup/group were randomly assigned to one of four testing groups. There were three groups assigned to behavioral testing

for neuromotor coordination (ascent on a wire mesh screen on PNDs 10, 12, and 14 and rotorod, not mentioned in the methods section), activity (open field activity and photoelectrically-monitored activity on PNDs 16–18, 30–32, 44–46, and 58–60, and running wheel activity on PNDs 32 and 33), and learning (avoidance conditioning, with separate groups tested beginning PNDs 34 and 60 and operant conditioning beginning PND 40). The fourth group was used for brain neurotransmitter analysis. On PND 21, brains were removed from 10 pups/group (one male and one female/litter) and dissected into four regions (cerebrum, cerebellum, midbrain, and brainstem); these samples were used to measure the levels of total proteins and neurotransmitters, including acetylcholine (ACh), dopamine, norepinephrine, serotonin, met-enkephalin, B-endorphin, and substance P. The study authors indicated that, since exposures to the two concentrations of n-butanol were separated by about 5 months, results could be compared to the contemporaneous controls, but comparisons between the two concentrations would not be appropriate.

Analysis of exposure concentrations showed consistency with target exposures (method of analysis not reported); measured concentrations were 3,010 ± 50 and 6,000 ± 80 ppm (9,824 ± 163 and 19,580 ± 261 mg/m^3, respectively; Nelson et al., 1990, 1989b). The study authors reported that n-butanol exposure did not affect pregnancy rate in any exposure groups. There were no behavioral changes in the offspring in terms of their performance in ascent test, rotorod performance, open field performance, or operant conditioning. In offspring of 18,000 mg/m^3 paternal exposure group, the time receiving shock and the total number of times that rats crossed from one side of the cage to the other were both statistically significantly increased over controls. Monitoring of photoelectric activity showed statistically significantly lower counts in female offspring of to the 9,000 mg/m^3 paternal exposure group but not in offspring of the high-concentration paternal exposure group (data not shown and magnitude of change not reported). Tests for avoidance conditioning showed that male offspring of the 9,000 mg/m^3 paternal exposure group required statistically significantly fewer trials to reach criterion than controls; no statistically significant change was observed at the high concentration. Analysis of neurotransmitter concentrations in the brains of offspring revealed statistically significant increases in the overall concentration of serotonin (mean ± SEs were 14.48 ± 2.38 versus 7.802 ± 1.48 in controls; units not reported) and dopamine (0.715 ± 0.127 versus 0.515 ± 0.095 in controls; units not reported) in offspring of the 18,000 mg/m^3 paternal exposure group. There were no other statistically significant changes in neurotransmitter concentrations associated with exposure to n-butanol. The study authors also indicated that the changes in both the neurobehavioral tests and neurotransmitter concentrations observed in the animals exposed to n-butanol were within the range of control data from their laboratory. The authors did not define effect levels. EPA identified the highest concentration tested, 18,000 mg/m^3 (6,000 ppm) as a NOAEL based on a lack of neurobehavioral effects in offspring after parental inhalation exposure to n-butanol.

In a study examining potential testicular toxicity, Cameron et al. (1985) exposed groups of five male Sprague-Dawley rats to n-butanol at a concentration of 50 ppm (150 mg/m^3) 6 hours/day for 1 day or 1 week. Testicular effects were assessed through the measurement of serum concentrations of testosterone, luteinizing hormone (LH), and corticosterone in blood samples collected at sacrifice at the end of exposure or 18 hours after the end of exposure following both the 1-day and 1-week exposures. In rats sacrificed after 1 day of exposure, statistically significant reductions in testosterone concentrations were observed; the decreases were 37 ± 8 and 52 ± 22% of controls when measured immediately after and 18 hours after exposure, respectively. In rats sacrificed after 1 week of exposure, testosterone levels were decreased (73–83% of controls), but the difference from controls was not statistically significant. Serum concentrations of LH were higher than controls (115–124% of controls) in animals treated with n-butanol for 1 day, but lower (78–98% of controls) in those treated for 1 week; none of the differences were statistically significant. Rats treated with n-butanol for 1 day had statistically significantly higher serum corticosterone than controls (143% of control); however, rats treated for 1 week had lower corticosterone (85% of control, not statistically significantly different from control).

4.4. OTHER DURATION- OR ENDPOINT-SPECIFIC STUDIES

Several studies determined LD50 values for n-butanol following acute and short-term exposure. Among rats, rabbits, hamsters, and mice, oral LD_{50} values ranged from 1,200 to 4,360 mg/kg (Rumyantsev, 1979; Dubina and Maksimov, 1976, as cited in OECD, 2001; Munch, 1972; Purchase, 1969; Jenner et al., 1964; Smyth et al., 1951; McOmie and Anderson, 1949; Munch and Schwartze, 1925). Additionally, acute and short term studies have evaluated liver, pulmonary, immune system, and nervous system toxicities. These studies are described in detail in Appendix C.2.

4.5. MECHANISTIC DATA AND OTHER STUDIES

4.5.1. Genotoxicity Studies

A series of genotoxicity assays of n-butanol in both bacterial and mammalian systems (see Appendix C, Table C-2). There was only one in vivo test of n-butanol genotoxicity. Bloom (1982) injected n-butanol into the inner shell membrane of chick embryos to assess the frequency of sister chromatid exchanges and chromosomal breaks. When tested at a concentration of 10 µL, no increases in the frequency of sister chromatid exchanges or chromosomal breakages were observed. In summary, the genotoxic potential of n-butanol has been evaluated in a variety of in vitro assays that have produced primarily negative results. The genotoxicity data are summarized in Table C-2 and discussed in more detail in Appendix C.3. Taken together, these data support the conclusion that n-butanol is not likely genotoxic.

4.5.2. Studies Evaluating Effects on the Nervous System, Liver, and Other Organs

Because of its structural relationship to ethanol, n-butanol has been tested in a large number of studies examining possible mechanisms for alcohol-induced neurotoxicity. The mechanistic data evaluating these effects are summarized in Table C-3, and effects in the liver and other tissues and organs following n-butanol exposure are discussed in detail in Appendix C.3.

4.6. SYNTHESIS OF MAJOR NONCANCER EFFECTS

4.6.1. Oral

Information on the effects of n-butanol in humans from oral exposure is limited to one case report from a suicide attempt (Bunc et al., 2006) where neurological, gastrointestinal, and cardiovascular symptoms were noted. In animal studies, there are subchronic, reproductive, and developmental toxicity studies that reported effects following oral n-butanol exposure (see Table 4-8).

CNS effects including dilations in the brain (Sitarek et al., 1994) and hypoactivity and ataxia (RTI, 1985; unpublished) were observed in multiple studies following exposure to n-butanol. Sitarek et al. (1994) reported a statistically significantly increased incidence of litters with visceral observations in the brain of the developing rat fetus; characterized as dilation of the subarachnoid space and dilation of the lateral and/or third ventricle in the brain. Hypoactivity and ataxia were observed in adult rats (RTI, 1985, unpublished). Similar to subchronic studies, short-term and acute studies reported neurotoxicity. Oral dosages of n-butanol resulted in impaired performance in the tilted plane test in rats (Wallgren, 1960) and dose-related decreases in rotorod performance in Swiss-Cox mice (Maickel and Nash, 1985).

There were two oral developmental toxicity studies, Sitarek et al. (1994) and Ema et al. (2005). In addition to the fetal effects in the brain, at higher doses Sitarek et al. (1994) reported increased internal hydrocephalus, decreased fetal crown-rump length, and increased incidence of skeletal variations (i.e., delayed ossification) and congenital defects (i.e., extra rib, 14th) in exposed rat fetuses. Sitarek et al. did not observe any maternal effects (1994). Ema et al. (2005) observed an increased incidence of skeletal variations (i.e., decrease in degree of ossification) and increased thymic remnant in the neck in developing fetuses of Sprague-Dawley rats exposed to n-butanol in drinking water throughout gestation. Additionally, maternal and fetal toxicity manifested as body weight reductions (Ema et al., 2005). Aside from similar ossification delays, differing results were observed in the developmental studies by Sitarek et al. (1994) and Ema et al. (2005). The discrepancy in these results may be due to differences in study design, particularly the rat strain used and exposure regimens. There are data that support strain differences between Wistar and Sprague-Dawley rats in developmental effects on the brain. For example, strain differences for developmental brain effects in Sprague-Dawley and Wistar rats following exposure to aspirin were evaluated by Gupta et al. (2003) in which the Wistar pups

had a significantly higher rate of hydrocephaly than the Sprague-Dawley pups. With respect to study design differences, Ema et al. (2005) utilized a gestation-only exposure regimen compared to the Sitarek et al. (1994) study, which exposed rats prior to mating, during mating, and throughout gestation. EPA notes that these studies show differing, but not conflicting, results.

Other effects include statistically significant decreases in the hematocrit, erythrocyte count, and hemoglobin content in female rats and a statistically significant increase (~14%) in thyroid weight of male rats (RTI, 1985, unpublished). Hepatic and renal effects (Munoz et al., 1991, 1990; Wakabayashi et al., 1991) were reported in two subchronic studies. Male rats exposed to 4,400 mg/kg-day for 4 months in a drinking water study (Munoz et al., 1991, 1990) were reported to have severe pathological changes in the liver and kidney. Similarly, hepatic effects such as proliferation of smooth endoplasmic reticulum and enlarged mitochondria were observed in a 3-month drinking water study with male rats exposed to 8,200 mg/kg-day (Wakabayashi et al., 1991). However, study design and reporting limitations with the Munoz et al. (1991, 1990) and Wakabayashi et al. (1991) studies precluded the identification of NOAELs and LOAELs for these effects. Sitarek et al. (1994) also reported visceral observations characterized as an increased incidence of unilateral and bilateral dilation of the renal pelvis. However, the toxicological significance of these effects is uncertain considering they were observed at the mid-dose only and did not exhibit a dose-response.

Similar to subchronic studies, short-term and acute studies reported effects in the liver and kidney as well as antiinflammatory effects. Liver toxicity was observed in a study where decreased thiamine, riboflavin, pyroxidine, niacin, and panthothenic acid content was noted in rats (Shehata and Saad, 1978). Effects following or during acute exposure, including narcosis and necropsies, indicated that there was necrosis of the liver and kidney as well as general organ congestion (Munch, 1972; Purchase, 1969; Jenner et al., 1964; McOmie and Anderson, 1949; Munch and Schwartze, 1925). In rats, n-butanol exposure resulted in a reduction of inflammatory response when treated with carageenan, a pro-inflammatory agent (Strubelt and Zetler, 1980).

Table 4-8. Summary of oral noncancer dose-response information for n-butanol

Species and study type	Exposure	NOAEL (mg/kg-d)	LOAEL (mg/kg-d)	Responses at the LOAEL	Comments	Reference
Subchronic studies						
Rat strain not specified 30/sex/dose Gavage	0, 30 125, or 500 mg/kg-d for 13 wks	125	500	Clinical signs (hypoactivity and ataxia) and effects on hematology (reduced hematocrit, erythrocyte count, and hemoglobin content)		RTI, 1985, unpublished
Reproductive and developmental studies						
Wistar Imp:DAK rat 11–17 females/ group drinking water	0, 300, 1,000, or 5,000 mg/kg-d for 8 wks prior to mating, through mating and gestation	5,000 (maternal) NA (developmental)	NA (maternal) 300 (developmental)	Increased incidences of malformations (dilation of the subarachnoid space and dilation of the lateral and/or third ventricle of the brain)	No maternal effects.	Sitarek et al., 1994
Sprague-Dawley rat 20 females/group drinking water	0, 316, 1,454, or 5,654 mg/kg-d on GDs 0–20	1,452 (maternal and developmental)	5,654 (maternal and developmental)	Decreased body weight gain, food consumption, and water consumption (maternal); decreased fetal body weight and increased incidence of skeletal variations (developmental)		Ema et al., 2005

4.6.2. Inhalation

The inhalation database contains a few acute human exposure experiments and occupational health studies. Controlled human exposure experiments have demonstrated that acute exposures to n-butanol vapors can exert an irritant effect on the eyes, nose, and throat (Kjaerguard et al., 1997; Wysocki et al., 1996, as cited in McLain, 2008 and ACGIH, 2002; Cometto-Muniz and Cain, 1995; Nelson et al., 1943) (see Table C-1). Kjaerguard et al. (1997) reported the most sensitive effects of irritation to the eye, nose, and throat following a 90-minute chamber exposure to 10 mg/m^3 n-butanol. A number of occupational health studies have also been conducted that examined neurological and neurobehavioral effects in workers who were exposed to mixtures of solvents including n-butanol (see Table 4-1). However, exposure to n-butanol in these studies was low compared to other solvents, and a number of the other solvents are known to exert neurotoxic effects. Therefore, it is not possible to attribute any of the effects to n-butanol exposure. Exposure-response relationships and effects levels could not be established for the available human studies due to limitations, including co-exposure to other solvents, lack of reporting of exposure and effect levels, lack of study details, and small sample sizes.

Several subchronic, developmental, and developmental neurotoxicity studies of n-butanol inhalation exposure in rats, mice and guinea pigs are available and are summarized in Table 4-9 (Korsak et al., 1994; Rumanystev et al., 1979; Smyth and Smyth, 1928; Nelson et al., 1989a, b). The primary toxicological effect observed in the subchronic exposure studies was a deficit in neurobehavioral performance. Korsak et al. (1994) reported a statistically significant increase in the failure rate for the rotorod test in rats. The neurotoxic effects observed following a subchronic exposure to 308 mg/m^3 n-butanol in rats (Korsak et al., 1994) is the most sensitive, biologically significant endpoint from inhalation following exposure durations that are subchronic or longer. The rotorod test is a measure of motor coordination (U.S. EPA, 1998). Korsak et al (1994) used a variation of the rotorod test where the method involved punishment (electric shock) for falling off the rotating rod. Rats were selected for the study based on successful performance for 2 min on 10 consecutive days prior to exposure. EPA considered impaired rotorod performance as being indicative of impairment in motor coordination in rats; suggesting that humans exposed to n-butanol may experience altered motor coordination, which is consistent with the available literature in humans exposed to alcohols.

Nelson et al. (1989a, b) evaluated the developmental and neurodevelopmental toxicity potential of n-butanol in rats. Increased incidence of litters with skeletal variation was observed at exposures of 11,000 mg/m^3 and increased levels of serotonin and dopamine were observed in offspring from male rats exposed to 18,000 mg/m^3 without changes in neurobehavioral function.

Hematological effects, primarily decreased erythrocyte count, were noted in all three subchronic studies (Korsak et al., 1994; Rumyantsev et al., 1979; Smyth and Smyth, 1928). The

lowest exposure at which hematological changes were observed was at 6.6 mg/m^3 in rats where increased blood cholinesterase activity was noted (Rumyantsev et al., 1979). However, it is unclear if the hematological changes are biologically relevant. Smyth and Smyth (1928) also reported histopathological changes in liver and kidney of exposed guinea pigs.

Several short-term inhalation exposure studies have characterized toxicities associated with n-butanol. Specifically, fatty infiltration of liver and kidney were observed in mice exposed to 24,624 mg/m^3 for 130 hours (Weese, 1928). Neurotoxic effects such as decreased duration of immobility were also reported at exposures of ≥1,420 mg/m^3 for 4 hours in mice (DeCeaurriz et al., 1983), and decreased responding (Frantik et al., 1994) in rats and mice following a 2–4-hour exposure. Respiration rates declined in Ssc:CF-1 mice exposed to exposure of ≥435 ppm (1,319 mg/m^3) for 30 minutes (Kristiansen et al., 1988) as well as in balb/C mice with a 50% respiratory decline following 4-hour exposures to 9,119 mg/m^3 (Korsak et al., 1993) or 13,036 mg/m^3 (Korsak and Rydzynski, 1994).

Table 4-9. Summary of inhalation noncancer dose-response information for n-butanol

Species and study type (n/sex/group)	Exposure	NOAEL (mg/m^3)	LOAEL (mg/m^3)	Responses at the LOAEL	Comments	Reference
Subchronic studies						
Wistar rat 12 male/exposure; 24 controls	0, 154, or 308 mg/m^3 6 hr/d, 5 d/wk for 3 mo	154	308	Impaired rotorod performance; increased leukocyte count	Histopathology was not evaluated.	Korsak et al., 1994
Guinea pig 3 group; sex unspecified	0, 300 mg/m^3 7 d/wk for 2 wks followed by 4 hr/d, 6 d/wk for 1–2.5 mo	NA	300	Decreased erythrocyte count and hemoglobin; histopathological changes in liver and kidney	Data and methodological details were not provided for the observed effects.	Smyth and Smyth, 1928
Mice and rats No details provided for number/exposure, sex, strain or methods	0, 0.8, 6.6, 40 mg/m^3 4 mo	0.8	6.6	Mice: Increased thyroid gland activity; disturbances of pituitary-adrenal system Rats: Increased blood cholinesterase activity	Only list of effects were provided in the report. No detailed information was provided on the analyses of the data.	Rumyantsev et al., 1979
Reproductive/developmental studies						
Sprague-Dawley rat;15–20 females/ group	0, 11,000, 18,000, or 24,000 mg/m^3 7 hrs/d on GDs 1–19	11,000 (maternal) NA (developmental)	18,000 (maternal) 11,000 (developmental)	Reduced food consumption (maternal) Increased incidence of litters with skeletal malformations (developmental)	Maternal narcosis and mortality were observed at 24,000 mg/m^3 (frank effect level).	Nelson et al., 1989a
Sprague-Dawley rat; 15 pregnant females and 18 males/group	0, 9,000, 18,000 mg/m^3 7 hr/d on GDs 1–19 (females) or for 6 wks prior to mating with nonexposed females (males)	18,000	NA	None	No neurobehavioral effects in offspring, regardless of whether mothers or fathers exposed.	Nelson et al., 1989b

4.6.3. Mode-of-Action Information for Noncancer

The primary effects observed following oral and inhalation exposure to n-butanol include neurological and neurodevelopmental effects. The mode of action for these effects is unknown. n-Butanol has been evaluated in a large number of studies examining possible mechanisms for alcohol-induced neurotoxicity (see Table C-3). One proposed mechanism is that alcohols, in general, produce neurological changes by disrupting the lipid bilayer. A few studies have shown that n-butanol, like other alcohols, can disrupt membrane integrity (Kowalczyk et al., 1996; Krill et al., 1993; Gastaldi et al., 1991). Other studies have found that n-butanol inhibits the excitatory glutamate receptor function (Akinshola, 2001; Peoples and Weight, 1999; Dildy-Mayfield et al., 1996; Lovinger et al., 1989) and potentiates inhibitory receptors such as glycine and GABA (Mascia et al., 2000; Peoples and Weight, 1999; Ye et al., 1998; Dildy-Mayfield et al., 1996; Nakahiro et al., 1991). The modulatory action of n-butanol inhibiting the excitatory glutamate receptors and potentiating the inhibitory GABA and glycine receptors is supportive of the observed neurobehavioral changes (e.g., CNS depressant profile) associated with n-butanol exposure in humans (Baikov and Khachaturyan, 1972; Seitz, 1972; Tabershaw et al., 1944; Nelson et al., 1943) and animals (Korsak et al., 1994; RTI, 1985, unpublished). Application of n-butanol (11–22 mM) also potentiated the serotonin (or 5-HT) response in HEK cells transfected with the $5HT_3$ receptor or in *Xenopus* oocytes injected with this receptor type (Rusch et al., 2007; Stevens et al., 2005; Zhou et al., 1998). $5HT_3$ receptors are known to regulate dopamine release and increased dopamine levels are associated with reward mechanisms. Nelson et al. (1990, 1989b) found that pups exposed to n-butanol in utero had statistically significant increases in brain levels of dopamine and serotonin that could be indirectly linked to n-butanol effects on the $5HT_3$ channel. Collectively, these studies suggest that effects on these ion channels may play a role in the anesthetic effects and possibly other subtle neurological effects of n-butanol.

In addition, studies have shown that n-butanol inhibits fetal rat brain astroglial cell proliferation by disrupting the PLD signaling pathway (Kotter et al., 2000; Kotter and Klein, 1999). n-Butanol was shown to be a good substrate for transphosphatidylation, resulting in the formation of phosphatidylbutanol and concomitantly decreasing the formation of the second messenger, PA. Importantly, the authors demonstrated that n-butanol is substantially more potent than ethanol in the inhibition of astroglial cell proliferation, which has been postulated as a mode of action for ethanol-induced microencephaly and mental retardation observed in cases of fetal alcohol syndrome. These mechanisms may also be relevant to the observed dilation of the subarachnoid space and dilation of the lateral and/or third ventricle (fetal brain visceral malformations) that were noted in Sitarek et al (1994) as they are relevant to other noted neurodevelopmental effects.

There is more limited information on potential modes of n-butanol-induced liver effects. Carlson (1994a, b) showed that n-butanol can esterify fatty acids in the liver and several other

organs. Fatty acid ethyl esters observed after ethanol exposure have been postulated to play a role in damage to several organs. Deters et al. (1998a) demonstrated that metabolism of n-butanol by ADH was not a necessary step in the hepatotoxic action of this compound. The same authors observed mitigation of several, but not all, in vitro measures of hepatotoxicity when glycine was added to isolated perfused liver systems along with n-butanol (Deters et al., 1998b); glycine had previously been shown to reduce hypoxia-related effects on the liver.

There are no available data to inform the modes of action for other noncancer effects including hematological changes, developmental toxicity, or kidney toxicity. The mechanistic data relating to the noncancer effects are further described in Appendix C.

4.7. EVALUATION OF CARCINOGENICITY

4.7.1. Summary of Overall Weight of Evidence

Under the U.S. EPA *Guidelines for Carcinogen Risk Assessment* (U.S. EPA, 2005a), there is "inadequate information to assess the carcinogenic potential" of n-butanol. None of the available human occupational health studies evaluated cancer endpoints. One occupational health study of workers exposed to n-butanol and several other solvents while employed as dockyard painters (Chen et al., 1999) examined mortality rates due to cancer; however, neither proportional mortality nor standardized mortality ratios due to cancers were increased in the painters relative to controls. There are no chronic animal studies of n-butanol exposure through any exposure route, and the available subchronic studies did not report any tumors. The genotoxicity database for n-butanol is limited; available information suggests that n-butanol does not induce mutations in *S. typhimurium* with or without exogenous metabolic activation (Muller et al., 1993; Jung et al., 1992; Nakamura et al., 1987; Connor et al., 1985; McCann et al., 1975), and does not increase the frequency of micronuclei or sister chromatid exchanges in Chinese hamster cells (Lasne et al., 1984; Obe et al., 1977) or in chick embryos in culture (Bloom, 1982). Studies of DNA and RNA replication have shown that n-butanol can exert an inhibitory effect on these processes (Obe and Ristow, 1977; Yoshiyama et al., 1973). There are no relevant mechanistic data to evaluate the mode(s) of action for carcinogenesis either in experimental animals or humans.

4.8. SUSCEPTIBLE POPULATIONS AND LIFE STAGES

4.8.1. Possible Childhood Susceptibility

There are no studies of age-related differences in susceptibility to the toxic effects of n-butanol. In a developmental toxicity study of oral exposure to n-butanol before and during gestation using Wistar Imp:DAK rats, increased incidences of dilation of the subarachnoid space and dilation of the lateral or third ventricle of the brain were reported (Sitarek et al., 1994), suggesting that the developing fetus may be particularly susceptible to the effects of n-butanol exposure. However, in a study using a different strain of rat (Sprague-Dawley) and exposure

scenario (gestation only), Ema et al., 2005) did not observe neurodevelopmental effects. Differences in strain susceptibility and exposure regimen may address this discrepancy (see Section 4.6.1). However, both Sitarek et al. (1994) and Ema et al. (2005) reported some skeletal variations related to delayed ossification in the developing rat fetus.

Inhalation studies of n-butanol (Nelson et al., 1989a) reported maternal toxicity (reduced food consumption and/or body weight gain) at concentrations resulting in fetal effects (primarily reduced body weight). A single study of behavioral teratology in offspring of rats exposed to n-butanol (Nelson et al., 1989b) did not observe treatment-related neurobehavioral changes.

Studies have demonstrated lifestage-specific differences in activity in the enzymes responsible for metabolism of n-butanol. Specifically, in humans, there is evidence of differential expression for three types of ADH (type I) enzymes: ADH1A, ADH1B, and ADH1C over different lifestages (Smith et al., 1971). Expression of the ADH enzymes was examined in the liver, lung, and kidney in 222 humans from 9 weeks gestation to up to 20 years of age. In the liver, it was reported that at 11 weeks of gestation, ADH1A was preferentially expressed and ADH1B and ADH1C were nondetectable. However, in adults, ADH1A is no longer detectable and there was equal expression of ADH1B and ADH1C. ADH expression was considerably lower in the lung and kidney and expression did not change with the lifestages. Studies in mice, rats, and guinea pigs have also reported significantly lower alcohol and aldehyde dehydrogenase activity in fetal animals (ranging from 10 to 40% of adult activity) in comparison to the adults (Boleda et al., 1992; Card et al., 1989; Timms and Holmes, 1981; Lindahl, 1977). The lower enzymatic activity of alcohol and aldehyde dehydrogenase during early development and childhood could potentially impact the metabolic capacity of n-butanol and may potentially make this population more susceptible to this exposure.

4.8.2. Possible Gender Differences

There are no studies of gender differences in susceptibility to the effects of n-butanol, although the available information does not suggest gender differences.

5. DOSE-RESPONSE ASSESSMENTS

5.1. ORAL REFERENCE DOSE (RfD)

5.1.1. Choice of Principal Study and Critical Effect—Rationale and Justification

Data on the health effects of oral exposure to n-butanol in humans is limited to one case report from a suicide attempt (Bunc et al., 2006) in which neurological, gastrointestinal, and cardiovascular symptoms were noted. This case study is not suitable for use in deriving the RfD. The animal toxicological database for n-butanol consists of one subchronic study, RTI (1985, unpublished), and two developmental toxicity studies, Ema et al. (2005) and Sitarek et al. (1994) where female reproductive parameters were also evaluated. Toxicological effects noted following exposure to n-butanol include neurotoxicity, developmental toxicity, and hematological changes. Figure 5-1 presents an exposure-response array of oral exposure data for n-butanol.

Neurotoxicity was observed in two studies. In a developmental toxicity study in rats, Sitarek et al. (1994) reported a statistically significant increase in the litter incidence of all dilation, incorporating dilation in both the brain and kidney dilations, at doses ≥ 300 mg/kg-day. Sitarek et al. (1994) also reported the litter incidence of dilations individually; a statistically significant increase in dilation of the subarachnoid space and of the lateral ventricle and/or third ventricle of the brain at ≥ 300 mg/kg-day and dilation of the unilateral and bilateral renal pelvis at 1000 mg/kg-day only. There is uncertainty regarding the toxicological significance of the unilateral and bilateral dilation of the renal pelvis due to the lack of dose-response (only the mid-dose group exhibited effects); thus these effects were not considered further. In addition, increased incidence of internal hydrocephalus was observed in the litters at ≥ 1000 mg/kg-day. Neurotoxicological effects (hypoactivity and ataxia) were also observed in adult rats at a similar dose of 500 mg/kg-day (RTI, 1985, unpublished). In a second developmental toxicity study, Ema et al. (2005) did not observe an increased incidence of dilations or similar neurotoxicological effects in the offspring of Sprague-Dawley rats exposed to n-butanol in drinking water throughout gestation (GDs 0–20) at doses of 316, 1,454, and 5,654 mg/kg-day.

Effects on the developing fetus were noted in both of the developmental toxicity studies by Sitarek et al. (1994) and Ema et al. (2005). Sitarek et al. (1994) reported decreased fetal crown-rump length, and increased incidence of skeletal variations (i.e., delayed ossification) and congenital defects (i.e., extra rib, 14th) in exposed rat fetuses; no maternal effects were observed. Ema et al. (2005) observed an increased incidence of skeletal variations (i.e., decrease in degree of ossification) and increased thymic remnant in the neck in developing fetuses of Sprague-Dawley rats exposed to n-butanol in drinking water throughout gestation. Additionally, body weight reductions were noted in both dams and fetuses (Ema et al., 2005). Aside from similar ossification delays, differing results were observed in the developmental studies by Sitarek et al.

(1994) and Ema et al. (2005). The discrepancy between the developmental studies is uncertain, but may be due to differences in experimental protocols particularly strain differences and exposure regimens (see Section 4.6.1).

Hematological changes were reported in one study (RTI, 1985, unpublished). Adult rats exposed to 500 mg/kg-day n-butanol exhibited reductions in hematocrit, erythrocyte count, and hemoglobin count.

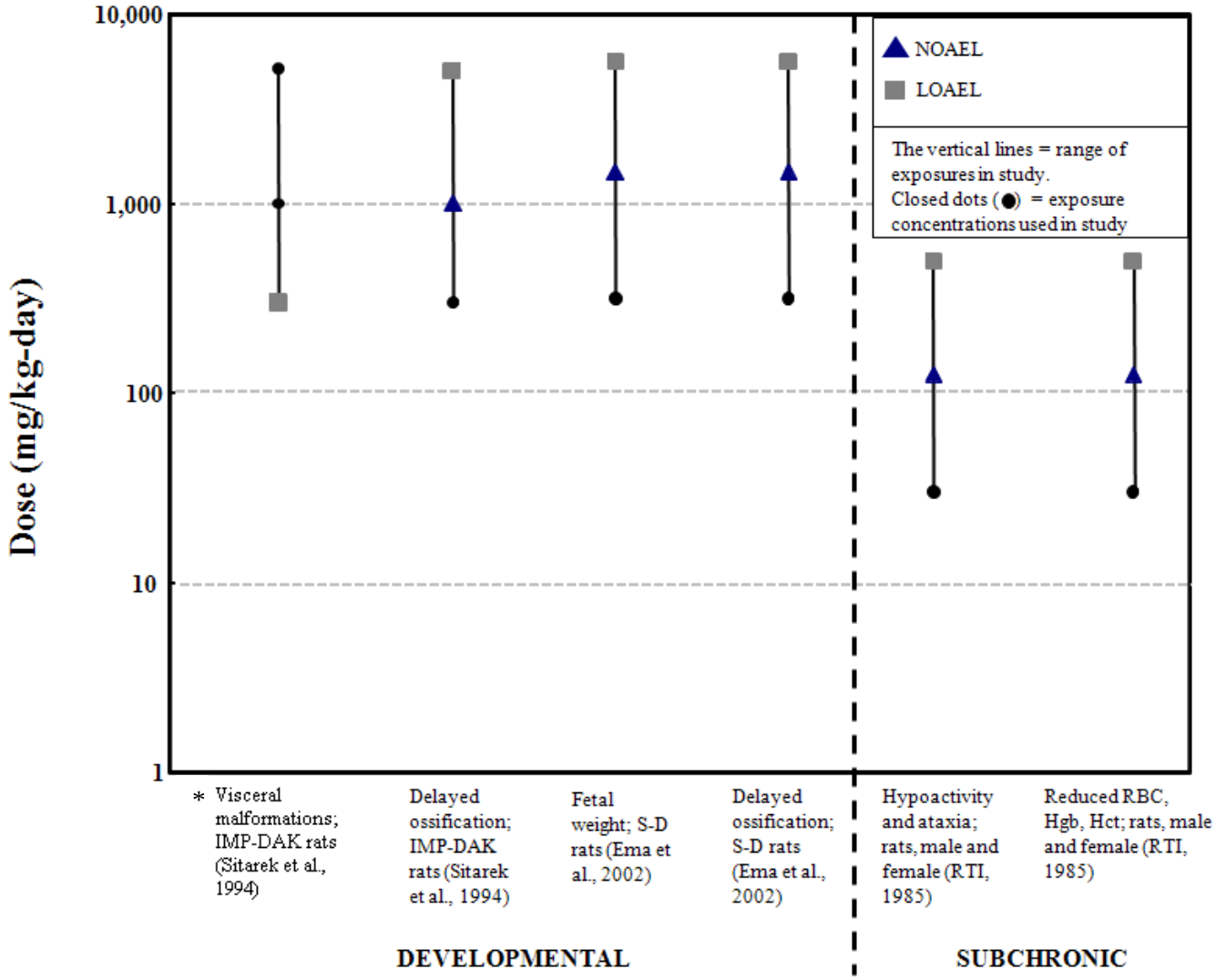

Figure 5-1. Exposure-response array for oral exposure to n-butanol.
*Visceral malformations here are defined as dilations of the brain (including dilation of the lateral ventricle and/or third ventricle and dilation of the subarachnoid space).

Sitarek et al. (1994) was selected as the principal study because it was a well-designed developmental toxicity study with group sizes of 11–17 dams and a sufficient number of litters per dose group. Three dose groups and an untreated control group were included in the study, and there was extensive evaluation of fetal parameters in the litters. Sitarek et al. (1994) reported neurotoxic effects that were the most sensitive toxicological effects observed in the oral database for n-butanol; a statistically significant increase in the incidence of litters with dilation of the subarachnoid space and dilation of the lateral and/or third ventricle of the brain in all dose groups (Table 5-1).

As noted above, Sitarek et al. (1994) reported an increased incidence of dilation of the subarachnoid space and dilation of the lateral and/or third ventricle of the brain at ≥300 mg/kg-day, as well as internal hydrocephalus in rat fetuses from the 1,000 and 5,000 mg/kg-day dose groups, following gestational exposures to n-butanol. Although the severity of the subarachnoid and ventricular dilations was not characterized in this rodent study, the data demonstrate a dose-responsive continuum of related adverse developmental outcomes. These outcomes are consistent with effects observed in rats exposed prenatally to ethanol, a known neurodevelopmental toxicant, (Sakata-Haga et al., 2004) and are relevant to humans. Dilations of the subarachnoid spaces and of the lateral and/or third ventricles of the brain can occur in humans and are pathological manifestations of hydrocephalus (Raimondi, 1994). The functional significance of dilation of the subarachnoid space and dilation of the lateral and/or third ventricle in humans appears to be related to the rate and severity of the dilation, as well as the developmental stage at which it occurs (Weichert et al., 2010; Del Bigio, 2001). In a retrospective epidemiology study of fetal ventriculomegaly in 29,000 pregnancies, lateral ventricular dilation in the brain was associated with neurodevelopmental delay (Weichert et al., 2010). In summary, the evidence, as presented, supports the interpretation of the treatment-related brain malformations in the rats as adverse and relevant to humans; and is consistent with the EPA's *Guidelines for Developmental Toxicity Risk Assessment* (1991) and *Guidelines for Neurotoxicity Risk Assessment* (1998). The endpoints (dilation of the subarachnoid space and dilation of the lateral and/or third ventricle) were considered candidate critical effects and the data for both endpoints were modeled using benchmark dose modeling to determine the point of departure (POD) for RfD derivation.

Table 5-1. Incidences of rat litters with dilation of the subarachnoid space and dilation of the lateral and/or third ventricle of the brain

Incidence of affected litters	n-Butanol dose in mg/kg-d			
	0	300	1,000	5,000
Litters with visceral malformations (dilation)—overall	1/12 (8%)	9/14 (64%)	10/12 (83%)	9/9 (100%)
Dilation of subarachnoid space	0/12 (0%)	2/14 (14%)	3/12 (25%)	7/9 (78%)
Dilation of lateral ventricle and/or third ventricle of the brain	1/12 (8%)	8/14 (57%)	8/12 (67%)	7/9 (78%)

Source: Sitarek et al. (1994).

5.1.2. Methods of Analysis—Including Models (e.g., PBPK, BMD)

Prior to dose-response analysis, the data were evaluated for the need to extrapolate doses to lifetime continuous human equivalent exposures. EPA guidance recommends expressing gestational exposures as a daily average during the period of exposure and not to extrapolate to lifetime exposure (U.S. EPA 1991). The principal study (Sitarek et al., 1994) administered n-butanol in drinking water (continuously) during gestation; thus, there was no further adjustment to be made to estimate lifetime continuous exposure.

In *Recommended Use of Body Weight$^{3/4}$ as the Default Method in Derivation of the Oral Reference Dose* (U.S. EPA, 2011), the Agency endorses a hierarchy of approaches to derive human equivalent oral exposures from data from laboratory animal species, with the preferred approach being physiologically based toxicokinetic modeling. Other approaches may include using some chemical-specific information, without a complete physiologically based toxicokinetic model. In lieu of chemical-specific modeling or data to inform the derivation of human equivalent oral exposures, EPA endorses body weight scaling to the ¾ power (i.e., $BW^{3/4}$) as a default to extrapolate toxicologically equivalent doses of orally administered agents from all laboratory animals to humans for the purpose of deriving a RfD under certain exposure conditions. That is, the use of $BW^{3/4}$ scaling for deriving a RfD is recommended when the observed effects are associated with the parent compound or a stable metabolite, but not for portal-of-entry effects or developmental endpoints.

The principal study used for the RfD derivation (Sitarek et al., 1994) exposed rats before and during gestation, and fetal effects were the most sensitive endpoint. The available PBPK model (Teeguarden et al., 2005) does not simulate oral exposure, nor does it include a fetal compartment, precluding use of this PBPK model for derivation of the RfD and estimation of the relevant internal dose metric for this study. The candidate critical effects (dilation of the subarachnoid space and dilation of the lateral ventricle and/or third ventricle of the brain in litters) are judged to be associated with the parent compound, and are not considered portal-of-entry effects. However these effects were observed in immature rats; therefore, scaling by $BW^{3/4}$ was not considered relevant for deriving the HEDs for the developmental effects.

In accordance with the EPA's draft *Benchmark Dose Technical Guidance* (U.S. EPA, 2000b), dose-response modeling was conducted using the U.S. EPA's benchmark dose (BMD) software (BMDS, version 2.1.1.) to calculate potential points of departure (PODs) for deriving the RfD by estimating the effective dose at a specified level of response (BMD_x) and its 95% lower bound ($BMDL_x$).

In the study by Sitarek et al. (1994), increased litter incidences of dilation of the subarachnoid space and dilation of the lateral ventricle and/or third ventricle were reported. These developmental effects could not be modeled using nested developmental toxicity dose-response models, as these models require individual offspring data which were not reported by Sitarek et al. (1994). EPA concluded that the developmental neurotoxicity endpoints were the most sensitive and that the combined brain malformation data (dilation of the subarachnoid space and dilation of the lateral and/or third ventricle) would provide a better estimate of the overall neurodevelopmental toxicity. However, Sitarek et al. (1994) presented litter data for total dilation (incidence of litters with any dilation, including both brain and renal dilation endpoints) and individual dilation data 1) dilation of the subarachnoid space; 2) dilation of the lateral ventricle and/or third ventricle; 3) unilateral dilation of the renal pelvis; and 4) bilateral dilation of the renal pelvis. As noted in Section 5.1.1, the renal dilation endpoints were not considered further due to uncertainties regarding toxicological significance. The data for the brain dilation endpoints only could not be combined due to the fact that they are presented as incidence of fetuses/litters affected. Therefore, BMD modeling was conducted separately for the litter incidence rate of the dilation of the subarachnoid space and dilation of the lateral ventricle and/or third ventricle dilation.

A benchmark response (BMR) of 10% extra risk in terms of affected litters was selected to derive the POD, based on the following considerations. First, the derivation focused on a level of extra risk in individual offspring that would be minimally biologically significant, in the range of 1-5% extra risk. While a level of 5% extra risk has typically been used with developmental effects when data are available to characterize individual offspring within litters (U.S. EPA, 2000b), the severity of the effects (i.e., dilation of the developing brain) supports using a BMR lower than 5%. That is, a BMR as low as 1% extra risk of fetal malformations might be considered minimally biologically significant. However, since the results of Sitarek et al. (1994) were not available as individual incidences within litters (i.e., nested data) but as affected litters, this BMR range could not be implemented directly. An analogous BMR in terms of affected litters was inferred from the available data. In the observed range, the percentage of affected litters was more than twice as high as the percentage of affected fetuses, indicating that a BMR in terms of affected litters would correspond to a lower BMR in terms of affected fetuses. However, at lower exposures it is possible that the incidence of affected offspring within litters would decrease, so that a 10% extra risk in affected litters could correspond more closely to a 1% extra risk in affected fetuses. Thus, a BMR of 10% extra risk among affected litters was

employed in order to target BMDs and BMDLs at lower levels of extra risk in affected offspring. BMDs and BMDLs associated with extra risk of 5% in affected litters for both endpoints were also calculated, using the selected best-fit models, for comparison.

No biologically based models are available for n-butanol. In this situation, EPA's practice is to evaluate a range of models to determine how to best empirically model the dose-response relationship in the range of the observed data. All models considered as part of EPA's BMDS are thought to be consistent with biological processes. All available dichotomous models in the EPA's BMDS (v. 2.1.1) were fit to the datasets for the increased incidences of dilation of the subarachnoid space and dilation of the lateral ventricle and/or third ventricle. Table 5-2 summarizes the BMD modeling results for these two endpoints.

For the endpoints that were considered, no model was determined to be the most biologically plausible. For dilation of the lateral ventricle and/or third ventricle, the log-logistic model was the only model with an adequate fit. For dilation of the subarachnoid space, all models provided an adequate fit with BMDLs ranging about fivefold, from approximately 122 to 680 mg/kg-d, indicating some model dependence of the results. As there was no over-riding biological or statistical basis for selecting a model, the model with the lowest BMDL, the log-logistic model, was selected. The $BMDL_{05}$ estimates associated with the two endpoints (presented for comparison purposed in Table 5-2) were relatively more sensitive than the respective $BMDL_{10}$ estimates; however, given the uncertainty of the correspondence of the BMR to individual incidence only the $BMDL_{10}$ estimates were considered. Appendix B contains a more detailed description of the modeling and results, along with graphs of the selected best-fit models.

Table 5-2. Summary of BMD modeling of results based on Sitarek et al. (1994) developmental toxicity data—dilation of the subarachnoid space and dilation of the lateral ventricle and/or third ventricle

Effect	BMD models with adequate fit	p-value	AIC	BMR	BMD (mg/kg-d)	BMDL (mg/kg-d)
Dilation of the lateral ventricle and/or third ventricle	**Log-logistic**	0.18	**57.60**	10%	**56.5**	**26.1**
				5%	26.7	12.4
Dilation of the subarachnoid space	Gamma, Multistage (1), Weibull	0.92	36.96	10%	327.6	203.9
	Logistic	0.40	41.41	10%	1073.7	679.7
	Log-logistic	**0.78**	**39.02**	10%	**275.2**	**121.5**
				5%	140.9	57.6
	Log-probit	0.43	40.6	10%	592.8	308.9
	Probit	0.42	41.25	10%	994.8	664.3

Of the two endpoints, the $BMDL_{10}$ for the subarachnoid space was about fivefold higher than that for the lateral/third ventricle. Thus, the critical effect selected for the derivation of the RfD is the increased incidence of dilation of the lateral ventricle and/or third ventricle because this represents the most sensitive effect, and the $BMDL_{10}$ of 26.1 mg/kg-day was selected as the POD for derivation of the chronic RfD for n-butanol.

5.1.3. RfD Derivation—Including Application of Uncertainty Factors (UFs)

Consideration of the available dose-response data led to the selection of the developmental neurotoxicity study (Sitarek et al., 1994) and dilation in the lateral ventricle and/or third ventricle of the brain in offspring of treated rats as the principal study and critical effect, respectively, for RfD derivation. The $BMDL_{10}$ of 26 mg/kg-day was selected as the POD for derivation of the chronic RfD. Selected based on EPA's *A Review of the Reference Dose and Reference Concentration Processes* (U.S. EPA, 2002; Section 4.4.5), the uncertainty factors, addressing five areas of uncertainty resulting in a composite UF of 300, were applied to the selected POD to derive an RfD.

- An interspecies uncertainty factor, UF_A, of 10 was applied to account for uncertainty in characterizing the toxicokinetic or toxicodynamic differences between rats and humans following oral n-butanol exposure. No information is available to quantitatively assess toxicokinetic or toxicodynamic differences between animals and humans exposed to n-butanol.

- An intraspecies uncertainty factor, UF_H, of 10 was applied to account for potentially susceptible individuals in the absence of data evaluating variability of response to oral n-butanol exposure in the human population.

- A database uncertainty factor, $UF_{D,}$ of 3 was applied to account for database deficiencies. The toxicological database for n-butanol includes one unpublished subchronic gavage study, and two developmental toxicity studies. One of the developmental toxicity studies, Sitarek et al. (1994), included 8 weeks of premating exposure and evaluation of estrous cyclicity and a number of fertility endpoints; however, this study was not a multigeneration reproductive toxicity study. Thus, a 3-fold UF was applied to account for the lack of a multigenerational reproductive toxicity study.

- A subchronic to chronic uncertainty factor, $UF_{S,}$ of 1 was applied because the POD is from a developmental toxicity study. Consistent with EPA practice (U.S. EPA, 1991), an uncertainty factor was not applied to account for the extrapolation from less than chronic exposure because developmental toxicity resulting from a narrow period of exposure was used as the critical effect. The developmental period is recognized as a susceptible life

stage when exposure during a time window of development is more relevant to the induction of developmental effects than lifetime exposure.

- A LOAEL to NOAEL uncertainty factor, UF_L, of 1 was applied because the current approach is to address this factor as one of the considerations in selecting a BMR for BMD modeling. In this case, a BMR of 10% extra risk of the incidence of litters with any offspring showing dilation of lateral ventricle and/or third ventricle of the brain was considered to be a minimally biologically significant level of effect. This BMR reflects the severity of the critical effect as well as the absence of nested offspring data. In this case, a BMR in terms of affected litters would correspond to a lower BMR in terms of affected fetuses, so that a 10% extra risk of affected litters could result in BMDs and BMDLs at lower levels of extra risk in affected fetuses.

The RfD of 0.09 mg/kg-day for n-butanol was calculated as follows:

$$\begin{aligned} RfD &= BMDL_{10} \div UF \\ &= 26 \text{ mg/kg-day} \div 300 \\ &= 0.09 \text{ mg/kg-day} \end{aligned}$$

5.1.4. Previous RfD Assessment

The previous RfD for n-butanol was posted to the IRIS database in 1987. An RfD of 1×10^{-1} mg/kg-day was derived based on hypoactivity and ataxia observed in the subchronic study by RTI (1985, unpublished). A cumulative UF of 1,000 (including 10-fold each for interindividual variability, interspecies uncertainty, and extrapolation from a subchronic study) was applied to the NOAEL of 125 mg/kg-day to derive the RfD.

5.2. INHALATION REFERENCE CONCENTRATION (RfC)

5.2.1. Choice of Principal Study and Critical Effect—Rationale and Justification

Information on the health effects of humans from inhalation exposure to n-butanol consists of a few acute human exposure and occupational health studies. Controlled human exposure experiments have demonstrated that n-butanol vapors can exert an irritant effect on the eyes, nose, and throat under acute exposure conditions at air concentrations ≥10 mg/m^3 (Kjaerguard et al., 1997; Nelson et al., 1943). Occupational health studies in which the primary exposure was to n-butanol reported effects including eye irritation (at 46–200 mg/m^3) (Cogan et al., 1945; Tabershaw et al., 1944) and hearing loss (at 240 mg/m^3) (Velazquez et al., 1969). Lack of methodological detail prevents evaluation of the adequacy of the exposure assessments used in all of these studies (Sterner et al., 1949; Cogan et al., 1945; Tabershaw et al., 1944). The eye irritation effects reported by Cogan and colleagues may also have been caused by other chemicals; however, prevalence was reported among workers in other plants where n-butanol was the only solvent exposure (Tabershaw et al., 1944). The high prevalence of hearing loss observed among n-butanol exposed workers is compelling (Velazquez et al., 1969), but the study

has limitations that present uncertainty for its use in the quantification of risk, including the small number of exposed workers (affects precision of the prevalence estimate) and the lack of methodological detail (e.g., sampling protocol, selection of referent group). Thus, none of the available human studies were considered further in the derivation of the RfC.

The animal toxicological database for inhalation exposure to n-butanol includes three subchronic exposure studies (Korsak et al., 1994; Rumanystev et al., 1979; Smyth and Smyth, 1928), a developmental toxicity study (Nelson et al., 1989a), and a neurodevelopmental study (Nelson et al., 1989b). There are no chronic exposure studies or experiments evaluating reproductive toxicity.

The primary toxicological effect observed in the subchronic exposure studies was a deficit in neurobehavioral performance. Korsak et al. (1994) reported a statistically significant increase in the failure rate for the rotorod test in rats exposed to 308 mg/m^3 n-butanol for 3 months. Of the three subchronic toxicity studies, only Korsak et al. (1994) reported the observed raw data. The other two studies (Rumanystev et al., 1979; Smyth and Smyth, 1928) only indicated statistically significant effects without reporting the raw data. Therefore, these two studies were not amenable to dose-response analysis.

Nelson et al. (1989a, b) evaluated the potential developmental and neurodevelopmental toxicity of n-butanol in rats. Increased incidence of litters with skeletal variation was observed at concentrations of 11,000 mg/m^3 and increased levels of serotonin and dopamine were observed in offspring from male rats exposed to 18,000 mg/m^3 without changes in neurobehavioral function.

In the three subchronic studies, hematological effects, primarily decreased erythrocyte counts, were noted (Korsak et al., 1994; Rumanystev et al., 1979; Smyth and Smyth, 1928). The lowest concentration at which hematological changes were observed was at 6.6 mg/m^3 in rats where increased blood cholinesterase activity was seen (Rumyantsev et al., 1979). However, it is unclear if the hematological changes observed following exposure to n-butanol are biologically relevant.

Figure 5-2 is an exposure-response array for inhalation exposure to n-butanol for select animal and human studies employing repeated exposure and reporting the most sensitive and/or relevant toxicological effects. Although the available human studies were inadequate for consideration in deriving the RfC, the most sensitive effects reported in the human occupational studies (Velazquez et al., 1969; Sterner et al., 1949) were included in Figure 5-2 for comparison purposes. The most sensitive effects in animal were reported in the subchronic inhalation study (Korsak et al., 1994). The Nelson et al. (1989a, b) developmental toxicity studies identified effects at concentrations several orders of magnitude higher.

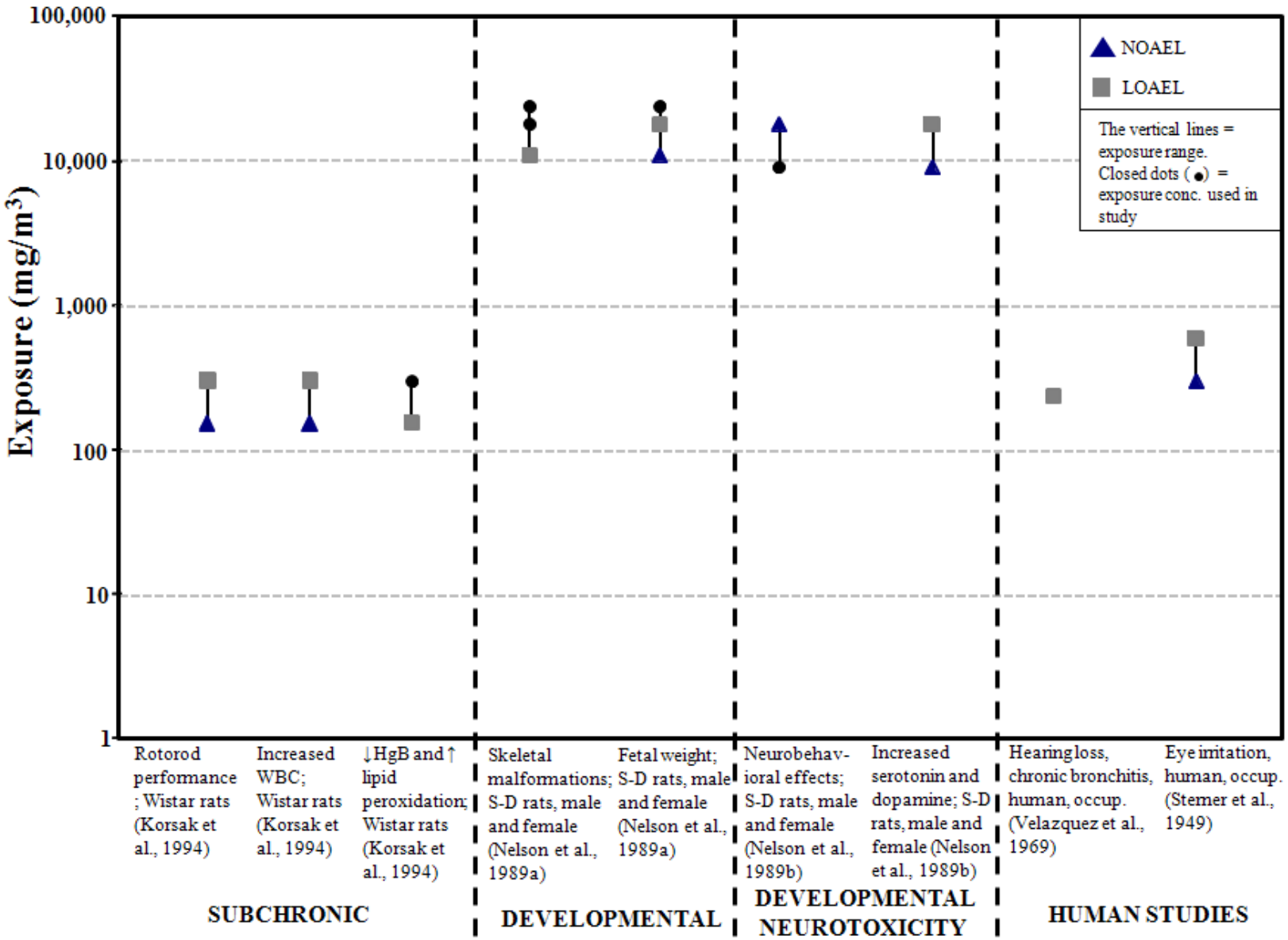

Figure 5-2. Exposure response array for inhalation exposure to n-butanol.

Korsak et al. (1994) was selected as the principal study for derivation of the RfC because it was a well-designed study and reported sensitive toxicological effects. Additionally, there was evaluation of the body and organ weights, measurement of biochemical and hematological parameters, and performance of neurological testing. In the study, two statistically significant effects, decreased hemoglobin and increased lipid peroxidation, were reported at the lowest concentration of 154 mg/m^3. The decreased hemoglobin levels were within historical levels reported for male Wistar rats (Giknis and Clifford, 2008) and hematocrit levels were not changed. The biological relevance of the observed increased hepatic lipid peroxidation is unknown because other hepatic endpoints were not affected in this study.

At the next highest concentration, 308 mg/m^3, there were statistically significant increases in white blood cell counts and decreased rotorod performance (Korsak et al., 1994). Although the increased white blood cell counts were outside of the historical range reported for male Wistar rats (Giknis and Clifford, 2008), other associated effects, such as immunotoxicological effects, were not tested in this study and have not been observed in other studies, except for in an acute anti-inflammatory study in Wistar rats, where the white blood cell count decreased with n-butanol administration (Strubelt and Zetler, 1980).

Decreased rotorod performance was selected as the critical effect for RfC derivation. The decreased rotorod performance was considered by EPA to be indicative of impaired neuromuscular function and this effect is considered adverse (U.S. EPA, 1998). Additionally, these types of neurobehavioral changes are relevant to humans and consistent with the alcohol and CNS literature (for a review, see Sullivan et al., 2010). The selection of this critical effect is supported by other neurotoxic effects (e.g., decreased immobility in the swim despair test and decreased response) observed in acute animal studies at concentrations ≥1,420 mg/m^3 (Frantik et al., 1994; DeCeaurriz et al., 1983), as well as the neurotoxic effects, ataxia and hearing impairment, observed in occupationally-exposed humans (Velazquez et al., 1969), and vertigo (Seitz, 1972).

5.2.2. Methods of Analysis—Including Models (e.g., PBPK, BMD)

A LOAEL of 308 mg/m^3 and a NOAEL of 154 mg/m^3 were identified based on decreased rotorod performance in rats exposed to n-butanol for 3 months (Korsak et al., 1994). Korsak et al. (1994) reported the data on rotorod performance graphically and without any estimate of variability within groups; thus, insufficient data were available for dose-response modeling. Instead, the rat NOAEL of 154 mg/m^3 was selected as the POD for RfC derivation.

Interspecies extrapolation (i.e., rat-to-human) of n-butanol inhalation dosimetry was accomplished using a rat and human PBPK model originally described in Teeguarden et al. (2005) with modifications by EPA described in Appendix D. The rat PBPK model was used to

estimate the value for the internal dose metric, represented as the area under the curve (AUC) for n-butanol concentration in arterial blood, corresponding to the NOAEL for decreased rotorod performance in a 90-day rat study (Korsak et al., 1994). The human PBPK model was used to estimate the continuous human inhalation exposure (mg/m^3) that would result from the value of the internal dose metric corresponding to the NOAEL in the rat. Details of the model code and parameters that were selected are presented in Section 3.5 and Appendix D.

The internal dose metric for the neurobehavioral effects of n-butanol is uncertain based on available data. The PBPK model for n-butanol (Teeguarden et al., 2005), with modifications, simulates n-butanol concentrations in blood, liver, and a lumped compartment representing other tissues. The model does not simulate concentrations of n-butanol in the brain. In the absence of dose-metric-specific data, parent compound concentration in the blood is generally selected as a surrogate since it represents the circulating matrix for distribution in the body. Therefore, blood n-butanol concentration was selected as the dose metric for neurobehavioral effects in animals. Korsak et al. (1994) observed progressive increases in severity of the motor incoordination with increasing exposure duration (1–3 months) at a constant exposure concentration, as well as with increasing exposure concentration. These observations suggest that the toxic response is a function of both n-butanol blood concentration and the duration of internal exposure to blood n-butanol. Therefore, arterial blood AUC was selected as the dose metric for dosimetry extrapolation to humans.

Korsak et al. (1994) exposed rats (average body weight of 0.392 kg as measured in the study) for 6 hours/day, 5 days/week, for a period of 3 months. This exposure was simulated in the rat PBPK model as a 90-day exposure of a 0.392 kg rat to 50 ppm (154 mg/m^3, the NOAEL) for 6 hours/day, 5 day/week. The internal dose metric (model variable: $AUCAB2_{24}$) was calculated as the integral of the time profile for the arterial concentration of n-butanol (model variable: CAB2) divided by the simulation time (t = 90 days × 24 hours/day = 2,160 hours), multiplied by 24 hours:

$$AUCAB2_{24} = \left(\frac{\int_0^t CAB2}{t}\right) \cdot 24\ hr$$

Conceptually, the internal dose metric ($AUCAB2_{24}$) represents the average 24-hour AUC for arterial n-butanol concentration for the 2,160-hour exposure duration. The value for $AUCAB2_{24}$ achieved pseudo-steady-state behavior after 2,000 hours (i.e., ±1% of the final value). The human exposure was simulated as a continuous exposure (24 hours/day, 7 days/week) for a 70-kg human. The simulated exposure duration was 1,000 hours. An exposure duration exceeding 500 hours was sufficient to achieve steady-state levels (i.e., >99.99% stability of the value for $AUCAB2_{24}$). Values for the rat NOAEL, $AUCAB2_{24}$, and

human equivalent NOAEL concentration (59 mg/m^3) calculated from the PBPK model are shown in Table 5-3.

Table 5-3. PBPK model calculation of HECs of the NOAEL based on rotorod performance in male rats exposed to n-butanol for 3 months

Rat NOAEL mg/m^3 (ppm)	Rat AUCAB2$_{24}$[a] mM	Human AUCAB2$_{24}$ mM	Human NOAEL (HEC) mg/m^3 (ppm)
154 (50)	0.01282	0.01282	59 (19.21)

[a]Area under the blood concentration versus time curve for rats estimated using rat PBPK model and exposure to NOAEL concentration of 50 ppm (154 mg/m^3) for 6 hours/day, 5 days/week for 3 months (Korsak et al., 1994).

5.2.3. RfC Derivation—Including Application of Uncertainty Factors (UFs)

Consideration of the available dose-response data led to the selection of the subchronic study by Korsak et al., (1994) and decreased rotorod performance as the principal study and critical effect, respectively, for RfC derivation. The NOAEL$_{HEC}$ of 59 mg/m^3 obtained from PBPK modeling was determined to be the POD for derivation of the RfC for n-butanol. Based on EPA's *A Review of the Reference Dose and Reference Concentration Processes* (U.S. EPA, 2002; Section 4.4.5), the uncertainty factors, addressing five areas of uncertainty resulting in a composite UF of 1,000, were applied to the selected POD to derive an RfC.

- An interspecies uncertainty factor, UF$_A$, of 3 was applied to account for uncertainty in characterizing the toxicokinetic or toxicodynamic differences between rats and humans following oral n-butanol exposure. Use of PBPK modeling to convert the rat exposure concentration to a HEC accounts for toxicokinetic differences between rats and humans and reduces uncertainty associated with cross-species extrapolation. A factor of 3 is retained to account for interspecies variability in extrapolating from laboratory animals (rats) to humans because information is not available to quantitatively assess toxicodynamic differences between animals and humans exposed to n-butanol.

- An intraspecies uncertainty factor, UF$_H$, of 10 was applied to account for potentially susceptible individuals in the absence of data evaluating variability of response to inhalation n-butanol exposure in the human population.

- A database uncertainty factor, UF$_{D,}$ of 3 was applied to account for database deficiencies. The toxicological database for inhaled n-butanol includes several acute human experiments, occupational health studies, subchronic toxicity studies, and developmental and neurodevelopmental toxicity studies. The database lacks a multi-generation reproductive toxicity study.

- A subchronic to chronic uncertainty factor, $UF_{S,}$ of 10 was applied to account for extrapolation from a subchronic exposure duration study to a chronic RfC. The study selected as the principal study was a 3 month study by Korsak et al. (1994), with a study duration that falls well short of a standard lifetime study. However, the percentage of rotorod failures increased steadily over the period of the study within both the low and high exposure groups, with no indication of a plateau suggested beyond the end the exposure period. Consequently, even though the responses in the low exposure group were not reported to be statistically significantly different from concurrent control responses, the responses at both exposures were consistent with a worsening of the effect with continued exposure. Thus, a 10-fold UF was applied.

- A LOAEL to NOAEL uncertainty factor, $UF_{L,}$ of 1 was applied because a NOAEL was used as the POD.

The RfC of 0.06 mg/m^3 for n-butanol was calculated as follows:

$$\begin{aligned} RfC &= NOAEL_{HEC} \div UF \\ &= 59\ mg/m^3 \div 1{,}000 \\ &= 0.06\ mg/m^3 \end{aligned}$$

5.2.4. Previous RfC Assessment

An inhalation RfC for n-butanol was not previously available on IRIS.

5.3. UNCERTAINTIES IN THE RfD AND RfC

The following discussion identifies uncertainties associated with the quantification of the RfD and RfC for n-butanol. Following U.S. EPA practices and guidance (U.S. EPA, 1994b), the UF approach was applied to the identified PODs to derive an RfD and an RfC (see Sections 5.1.3 and 5.2.3). Factors accounting for uncertainties associated with a number of steps in the analyses were adopted to account for extrapolation from an animal study to human exposure and to a diverse human population of varying susceptibilities, for extrapolation from subchronic to chronic exposure duration, and for database deficiencies.

The RfD was derived based on the critical effect (increased litter incidence of dilation of the lateral ventricle and/or third ventricle in the brain) in rats in a developmental toxicity study of n-butanol (Sitarek et al., 1994). Uncertainty regarding the most relevant study to extrapolate to humans is associated with the differing results of the developmental studies by Sitarek et al. (1994) and Ema et al. (2005) (see Section 4.6.1). However, in the absence of data indicating

which species or exposure regimen is more relevant for extrapolation to humans, EPA selected the more sensitive study.

Uncertainty also exists in the selection of the appropriate BMR for use in the BMD modeling of the critical effect to estimate the POD. As discussed in Section 5.1.2, the severity of the critical effect and the nature of the critical effect led to the use of a 10% extra risk BMR in affected litters. The extent of extrapolation below the observed data also results in some uncertainty regarding the corresponding level of effect in affected offspring.

The RfC was derived based on decreased rotorod performance in rats exposed to n-butanol via inhalation for 3 months (Korsak et al., 1994). The decreased rotorod performance, as reported by Korsak et al. (1994), is indicative of altered motor coordination. With regard to the study design, it is not known when behavioral testing was conducted following n-butanol exposure. Therefore, the internal dose of n-butanol is more difficult to predict since the amount cleared (if applicable) prior to testing is unknown. It is likely that the observed decreased rotorod performance is reflective of persistent effects of n-butanol based on the increased deterioration of performance over the 3 months. BMD modeling could not be performed using these data due to the lack of reporting by the investigators of within-group variability estimates. By definition, the identification of a NOAEL or LOAEL is restricted to the particular doses or exposure concentrations used in a study, and thus, this type of analysis lacks characterization of the entire dose-response curve for the effect of interest. As a result, a POD based on a NOAEL or LOAEL is less informative than one derived from BMD modeling.

Critical endpoints for both the RfD and RfC were neurological and there was a lack of postnatal observations in the developmental toxicity studies since offspring were sacrificed at the end of the gestational period (Ema et al., 2005; Sitarek et al., 1994; Nelson et al., 1989a). These deficiencies suggest that further evaluation of the neurotoxic and neurodevelopmental effects of n-butanol would be beneficial.

An additional source of uncertainty in the derivation of both the RfD and RfC is extrapolation from animals (rats) to humans. An effect and its magnitude associated with the concentration at the POD in rodents are extrapolated to human response. Pharmacokinetic models are useful in examining species differences in pharmacokinetic processing; however, dosimetric adjustment using pharmacokinetic modeling was not possible following oral exposure to n-butanol since the model does not contain an oral route of administration and incorporate the subsequent first-pass effect. There are data gaps in pharmacokinetic parameters since there is no information on distribution of n-butanol to the fetus as well as no information of the elimination of n-butanol via breast milk which represents an uncertainty for both the RfD and RfC. For RfC derivation, a PBPK model was used to account for toxicokinetic differences between rats and humans, and the internal dose metric, blood n-butanol AUC, was selected. PBPK models attempt to simulate what occurs in vivo, and thus, dose estimates from these models represent an

additional source of uncertainty in the analysis. In the absence of specific data that could inform the selection of the appropriate internal dose metric, the blood AUC of the parent compound (i.e., n-butanol) was selected as the preferred dose metric. Additionally, there is human uncertainty related to the urinary clearance rate of n-butanol and its metabolites. Specifically, butyric acid, a metabolite of n-butanol, interacts with colonocytes and is incorporated into lipid membranes (Thibault et al., 2010). However, kinetic information is currently not available to address this uncertainty, and thus, urinary clearance of metabolites was not incorporated into the model. Another uncertainty with the model is the extent that n-butyric acid is metabolized to acetyl CoA and then to CO_2 and water or to acetoacetyl CoA, (produced by beta oxidation of the butanoic acid).

Heterogeneity among humans with respect to the toxicokinetics and toxicodynamics of n-butanol represents another area of uncertainty in both the RfD and RfC derivations. n-Butanol is rapidly metabolized to butyric aldehyde by ADH and further to n-butyric acid by aldehyde dehydrogenase. Polymorphisms in the genes encoding ADH and aldehyde dehydrogenase exist in the human population and may contribute to variability in metabolism of n-butanol. One key genetic polymorphism is the ALDH2 (aldehyde dehydrogenase 2) allele that has been identified as a slow metabolizing variant of aldehyde dehydrogenase and has been more commonly found in East Asian populations (Dickson et al., 2006). Populations with low metabolizing capacity (slow alcohol and aldehyde dehydrogenases) are more likely to be susceptible to toxicities associated with n-butanol since there would be a longer half-life in these individuals. Another key polymorphism has been identified in the ADH3 gene where the gamma1 variant is found in individuals that are fast metabolizers and the gamma2 variant is found in individuals that are slow metabolizers (Hines et al., 2001). The polymorphisms in the n-butanol metabolizing enzymes indicate that there may be a great deal of variability in the effects associated with exposure in humans.

5.4. CANCER ASSESSMENT

Under the U.S. EPA *Guidelines for Carcinogen Risk Assessment* (U.S. EPA, 2005a), there is “inadequate information to assess the carcinogenic potential” of n-butanol. None of the available occupational health studies of n-butanol evaluated cancer endpoints. One occupational health study of workers exposed to n-butanol, and several other solvents, while employed as dockyard painters examined mortality rates due to cancer (Chen et al., 1999); however, neither proportional mortality nor standardized mortality due to cancers were increased in the painters relative to controls. There are no chronic animal studies of n-butanol exposure via any exposure route, and the subchronic studies did not report any cancer endpoints.

5.4.1. Previous Cancer Assessment

The previous cancer assessment, posted to the IRIS database in 1991, included a cancer weight of evidence classification of D; not classifiable as to human carcinogenicity. This descriptor was based on lack of human and animal cancer data.

6. MAJOR CONCLUSIONS IN THE CHARACTERIZATION OF HAZARD AND DOSE RESPONSE

6.1. HUMAN HAZARD POTENTIAL

n-Butanol (CASRN 71-36-3) is used as a direct solvent in paints, surface coatings, lacquers, thinners, pharmaceutical formulations, waxes, and resins. It is also used to make plasticizer esters and mono-, di-, and tributylamines and oxygenate for gasoline. Commercial derivatives of n-butanol include n-butyl acrylate, methacrylate, butyl glycol ethers, 2-butoxy-ethanol, and butyl acetate.

Toxicokinetic studies of n-butanol have been conducted in humans and experimental animals. Absorption via inhalation has been demonstrated in humans (Astrand et al., 1976), and absorption via the oral, dermal, and inhalation routes was demonstrated in laboratory animals (Poet et al., 2003a, b; Deisinger and English, 2001; Boman et al., 1995; Swiercz et al., 1995; DiVincenzo and Hamilton, 1979a). Only limited information is available regarding tissue distribution of n-butanol in animal studies; after gavage dosing of rats with radiolabelled n-butanol, the liver had the largest percentage of radioactivity (DiVincenzo and Hamilton, 1979a). n-Butanol is rapidly metabolized to butyric aldehyde by ADH and further to n-butyric acid, also known as butanoic acid, by aldehyde dehydrogenase (ECETOC, 2003). It is also oxidized by cytochrome P450 in rat liver (Albano et al., 1991). n-Butanol is excreted primarily as CO_2 in exhaled breath with minor amounts eliminated in the urine and feces (DiVincenzo and Hamilton, 1979a). A PBPK model has been developed (Teeguarden et al., 2005) to describe blood kinetics for n-butyl acetate and its metabolites, n-butanol and n-butyric acid, in rats and humans exposed via inhalation.

Information on noncancer effects in humans orally exposed to n-butanol is limited to one case report from a suicide attempt (Bunc et al., 2006) in which neurological, gastrointestinal, and cardiovascular symptoms were noted. The database on animal toxicity indicates that developmental neurotoxicity is the most sensitive endpoint associated with oral n-butanol administration (Sitarek et al., 1994). Specifically, increased litter incidences of dilation of the subarachnoid space and dilation of the lateral and/or third ventricle of the brain were observed in the pups of female Wistar Imp:DAK rats treated with n-butanol in drinking water at doses of 300, 1,000, and 5,000 mg/kg-day administered for 8 weeks prior to mating and then continuously through mating and gestation. Neurotoxicity (hypoactivity and ataxia) in adult rats was also observed in a 13-week gavage study at 500 mg/kg-day (RTI, 1985, unpublished). Other observed effects included skeletal variations and ossification effects at 300 mg/kg-day (Sitarek et al., 1994) and 5,654 mg/kg-day (Ema et al., 2005), hematological changes and increased thyroid weight at 500 mg/kg-day (RTI, 1985, unpublished), and pathological changes in the liver and kidney at an exposure of 4,400 mg/kg-day in male rats (Munoz et al., 1991, 1990).

Controlled human exposure experiments have demonstrated that n-butanol vapors can exert an irritant effect on the eyes, nose, and throat under acute exposure conditions at air concentrations ≥10 mg/m^3 (Kjaerguard et al., 1997; Nelson et al., 1943). Occupational health studies in which the primary exposure was to n-butanol reported effects including eye irritation (at 46–200 mg/m^3) (Cogan et al., 1945; Tabershaw et al., 1944) and hearing loss (at 240 mg/m^3) (Velazquez et al., 1969). These studies are limited by uncertainties arising from a lack of detail in methods description for exposure assessments and other details of study design.

The CNS is the most sensitive target following a repeated inhalation exposure to n-butanol in animals. Korsak et al. (1994) reported a statistically significant increase in the failure rate for the rotorod test in rats exposed to 308 mg/m^3 n-butanol for 3 months. Nelson et al. (1989a, b) evaluated the developmental and neurodevelopmental toxicity potential of n-butanol in rats. Increased incidence of litters with skeletal variation was observed at exposures of 11,000 mg/m^3 and increased levels of serotonin and dopamine were observed in offspring from male rats exposed to 18,000 mg/m^3 without changes in neurobehavioral function. Several short-term inhalation exposure studies have reported fatty infiltration of liver and kidney in mice exposed to 24,624 mg/m^3 (Weese, 1928), neurotoxic effects at exposures of 1,420 mg/m^3 in mice and rats (Frantik et al., 1994; DeCeaurriz et al., 1983), and decreased respiration rates in mice (Korsak and Rydzynski, 1994; Korsak et al., 1993; Kristiansen et al., 1988).

None of the available human occupational health studies in which the primary exposure was to n-butanol evaluated cancer endpoints. One occupational health study of workers exposed to n-butanol, as well as several other solvents, while employed as dockyard painters examined mortality rates due to cancer (Chen et al., 1999); however, neither proportional mortality nor standardized mortality due to cancers were increased in the painters relative to controls. There are no chronic animal studies of n-butanol exposure via any exposure route, and the available subchronic studies did not report any cancer endpoints. Therefore, under the U.S. EPA *Guidelines for Carcinogen Risk Assessment* (U.S. EPA, 2005a), there is "inadequate information to assess the carcinogenic potential" of n-butanol.

6.2. DOSE RESPONSE

6.2.1. Oral Noncancer

From the available data on oral exposure to n-butanol, the developmental toxicity study in Wistar Imp:DAK rats (Sitarek et al., 1994) was selected as the principal study for RfD derivation and the increased litter incidence of dilation of the lateral ventricle and/or third ventricle in the brain was selected as the critical effect.

The RfD derivation involved fitting all of the available dichotomous models in BMDS, version 2.1.1, to the litter incidence data for dilation of the lateral ventricle and/or third ventricle. A BMR of 10% extra risk in affected litters was selected in order to approximate a 1−5% extra risk in affected offspring. Dose-response modeling yielded a $BMDL_{10}$ of 26 mg/kg-day, which

was selected as the POD. A composite UF of 300 (10 to account for interspecies uncertainty, 10 to account for human variability, 3 for database uncertainty) was applied to the POD to derive an RfD of 0.09 mg/kg-day.

Confidence in the principal study (Sitarek et al., 1994) is medium. This developmental toxicity study evaluated exposure in three dose groups and a control, using group sizes of 11–17 female rats exposed for 8 weeks prior to mating as well as during mating and gestation. The study evaluated body weight, clinical signs, and estrous cyclicity in dams, as well as litter parameters and teratogenicity endpoints. Confidence in the database is low-to-medium. Oral toxicity studies of n-butanol include an unpublished subchronic study that evaluated comprehensive endpoints but lacked data tables and appendices, and two developmental toxicity studies. All of the available animal studies were conducted in rats. The database is lacking chronic toxicity studies, toxicity data in a laboratory species other than rats, and a multigeneration reproductive toxicity study. Neurodevelopmental effects should also be further evaluated in light of the effects on brain development in the Sitarek et al. (1994) developmental toxicity study. Overall confidence in the RfD is low-to-medium.

6.2.2. Inhalation Noncancer

The CNS is the most sensitive target for noncancer toxicity in rats following repeated inhalation exposure to n-butanol. Korsak et al. (1994) was selected as the principal study for derivation of the RfC because it was a well-designed study, evaluated relatively lower exposure effects, and provided a sensitive endpoint of neurologic impairment (altered motor coordination as indicated by decreased rotorod performance). The most sensitive endpoint of decreased rotorod performance in rats exposed to n-butanol for 3 months was selected as the critical effect.

The data for this endpoint were not amenable to BMD modeling due to the absence of within-group variability estimates for rotorod performance, so a NOAEL identified from this study (154 mg/m^3) was selected as the POD. PBPK modeling using a modification of the model published by Teeguarden et al. (2005) was used to estimate a $NOAEL_{HEC}$ concentration of 59 mg/m^3 based on arterial n-butanol blood concentration (AUC) as the internal dose metric. A composite UF of 1,000 (3 to account for interspecies toxicodynamic uncertainty, 10 to account for human variability, 10 to account for uncertainty of subchronic to chronic extrapolation, 3 for database uncertainty) was applied to the POD to derive an RfC of 0.06 mg/m^3.

Confidence in the principal study (Korsak et al., 1994) is low-to-medium. This subchronic study evaluated exposure in two dose groups and a sham-treated control, using group sizes of 12 male rats. The study evaluated body weight, hematology, clinical chemistry, neurotoxicity endpoints (rotorod performance and hot-plate response), and selected organ weights, but did not evaluate histopathology. Confidence in the database is low-to-medium. Inhalation toxicity studies of n-butanol include the subchronic study used as the basis for the RfC

as well as developmental toxicity and developmental neurotoxicity studies, all conducted in rats. The database is lacking chronic toxicity studies, toxicity data in a laboratory species other than rats, and a multigeneration reproductive toxicity study. Neurological effects were observed in the available subchronic study; however, the study evaluated only two measures of neurotoxicity (rotorod performance and hot-plate response). Overall confidence in the RfC is low-to-medium.

6.2.3. Cancer—Oral and Inhalation

Data were not available to quantitatively evaluate the cancer risk associated with n-butanol.

7. REFERENCES

ACGIH (American Conference of Governmental Industrial Hygienists). (2002) n-Butanol. In: Documentation of the threshold limit values and biological exposure indices. Cincinnati, OH: American Conference of Governmental Industrial Hygienists.

Akhmadeyeva, EN. (1993) Health of newborns of workers in the petroleum-chemical industries. Reprod Toxicol 7(5):491–492.

Akinshola, BE. (2001) Straight-chain alcohols exhibit a cutoff in potency for the inhibition of recombinant glutamate receptor subunits. Br J Pharmacol 133:651–658.

Albano, E; Tomasi, A; Persson, J; et al. (1991) Role of ethanol-inducible cytochrome P450 (P450IIE1) in catalysing the free radical activation of aliphatic alcohols. Biochem Pharmacol 41(12):1895–1902.

Amoore, JE; Hautala, E. (1983) Odor as an aid to chemical safety: odor thresholds compared with threshold limit values and volatilities for 214 industrial chemicals in air and water dilution. J Appl Toxicol 3(6):272–290.

Angerer, J; Wulf, H. (1985) Occupational chronic exposure to organic solvents. XI. Alkylbenzene exposure of varnish workers: effects on hematopoetic system. Int Arch Occup Environ Health 56:307–321.

Arsov, Z; Zorko, M; Schara, M. (2005) Inhibition of erythrocyte acetylcholinesterase by n-butanol at high concentrations. Arch Biochem Biophys 437:78–84.

Astrand, I; Ovrum, P; Lindqvist, T; et al. (1976) Exposure to butyl alcohol: uptake and distribution in man. Scand J Work Environ Health 2(3):165–175.

Auty, RM; Branch, RA. (1976) The elimination of ethyl, n-propyl, n-butyl and iso-amyl alcohols by the isolated perfused rat liver. J Pharmacol Exp Ther 197:669–674.

Baikov, BK; Khachaturyan, MK. (1973) Hygienic evaluation of the reflex action on the body of low concentrations of butyl alcohol entering the atmosphere. Gig Sanit 38(12):7–11. (Russian)

Bariliak, IR; Korkach, VI; Spitkovskaia, LD. (1991) The embroyotoxic effects of monohydric alcohols. Ontogenez 22(1):71–75. (Russian)

Barton, HA; Deisinger, PJ; English, JC; et al. (2000) Family approach for estimating reference concentrations/doses for series of related organic chemicals. Toxicol Sci 54:251–261.

Behl, CR; El-Sayed, AA; Flynn, GL. (1983) Hydration and percutaneous absorption. IV: Influence of hydration on n-alkanol permeation through rat skin; comparison with hairless and Swiss mice. J Pharm Sci 72(1):79–82.

Behl, CR; Flynn, GL; Kurihara, T; et al. (1984) Age and anatomical site influences on alkanol permetion of skin of the male hairless mouse. J Soc Cosmet Chem 35:237–252.

Bhattacharji, A; Kaplan, B; Harris, T; et al. (2006) The concerted contribution of the S4-S5 linker and the S6 segment to the modulation of a Kv channel by 1-alkanols. Mol Pharmacol 70(5):1542–1554.

Billig, E. 2001. Butyl alcohols. In: Kirk-Othmer encyclopedia of chemical technology. Available online at http://mrw.interscience.wiley.com/emrw/9780471238966/kirk/article/butybill.a01/current/pdf (accessed August 17, 2009).

Bleecker, ML; Bolla, KI; Agnew, J; et al. (1991) Dose-related subclinical neurobehavioral effects of chronic exposure to low levels of organic solvents. Am J Ind Med 19(6):715–728.

Bloom, SE. (1982) Detection of sister chromatid exchanges in vivo using avian embryos. In: Hsu, TC; ed. Cytogenic assays of environmental mutagens. Totowa, NJ: Allanheld, Osmun & Co.; pp. 137–159.

Boleda, MD; Farrés, J; Guerri, C; Parés, X (1992). Alcohol dehydrogenase isoenzymes in rat development. Effect of maternal ethanol consumption. Biochem Pharmacol. 43(7):1555–1561.

Boman, A; Maibach, HI. (2000) Influence of evaporation and solvent mixtures on the absorption of toluene and n-butanol in human skin in vitro. Ann Occup Hyg 44(2):125–135.

Boman, A; Hagelthorn, G; Magnusson, K. (1995) Percutaneous absorption of organic solvents during intermittent exposure in guinea pigs. Acta Derm Venereol 75:114–119.

Boublik, T; Fried, V; Hala, E. (1984) The vapor pressures of pure substances: selected values of the temperature dependence of the vapour pressures of some pure substances in the normal and low pressure region. Vol. 17. Amsterdam, Netherlands: Elsevier Science Publications.

Brown, RP; Delp, MD; Lindstedt, SL; et al. (1997) Physiological parameter values for physiologically based pharmacokinetic models. Toxicol Ind Health 13(4):407–484.

Bunc, M; Pezdir, T; Mozina, H; et al. (2006) Butanol ingestion in an airport hangar. Hum Exp Toxicol 25(4):195–197.

Buttery, RG; Ling, LC; Guadagni, DG. (1969) Volatilities of aldehydes, ketones, and esters in dilute water solution. J Agric Food Chem 17(2):385–389.

Cameron, AM; Zahlsen, K; Haug, E; et al. (1985) Circulating steroids in male rats following inhalation of n-alcohols. Arch Toxicol Suppl 8:422–424.

Card, SE; Tompkins, SF; Brien, JF. (1989). Ontogeny of the activity of alcohol dehydrogenase and aldehyde dehydrogenases in the liver and placenta of the guinea pig. Biochem Pharmacol. 38(15):2535–2541.

Carlson, GP. (1994a) In vitro esterification of fatty acids by various alcohols in rats and rabbits. Toxicol Lett 70:57–61.

Carlson, GP. (1994b) Formation of esterified fatty acids in rats administered 1-butanol and 1-pentanol. Res Commun Mol Pathol Pharmacol 86(1):111–117.

Carlson, GP; Olson, RMC. (1995) Comparison of the metabolism of alcohols by rat hepatic and pulmonary alcohol dehydrogenase. Biochem Mol Biol Int 37(1):65–71.

Cederbaum, AI. (1978) The effect of calcium on the oxidation of acetaldehyde by rat liver mitochondria. Life Sci 22(1):111–125.

Cederbaum, AI; Dicker, E; Rubin, E; et al. (1979) Effect of thiourea on microsomal oxidation of alcohols and associated microsomal functions. Biochemistry 18(7):1187–1191.

ChemIDplus. (2009) N-Butanol. ChemIDplus. Bethesda, MD: U.S. National Library of Medicine. Available online at http://sis.nlm.nih.gov/chemical.html (accessed on August 14, 2009).

Chen, R; Dick, F; Seaton, A. (1999) Health effects of solvent exposure among dockyard painters: mortality and neuropsychological symptoms. Occup Environ Med 56(6):383–387.

Cogan, DG; Mort, W; Grant, MD. (1945) An unusual type of keratitis associated with exposure to n-butyl alcohol (butanol). Arch Ophthalmol 33:106–108.

Cometto-Muniz, JE; Cain, WS. (1995) Relative sensitivity of the ocular trigeminal, nasal trigeminal and olfactory systems to airborne chemicals. Chem Senses 20(2):191–198.

Connor, TH; Theiss, JC; Hanna, HA; et al. (1985) Genotoxicity of organic chemicals frequently found in the air of mobile homes. Toxicol Lett 25:33–40.

Crofton, KM; Lassiter, TL; Rebert, CS. (1994) Solvent-induced toxicity in rats: an atypical selective mid-frequency hearing deficit. Hear Res 80:25–30.

De Ceaurriz, J; Desiles, JP; Bonnet, P; et al. (1983) Concentration-dependent behavioral changes in mice following short term inhalation exposure to various industrial solvents. Toxicol Appl Pharmacol 67(3):383–389.

Deisinger, PJ; English, JC. (2001) Pharmacokinetics of n-butyl acetate and its metabolites in rats after intravenous administration. Rochester, NY: Toxicological Sciences Laboratory, Health and Environmental Laboratories, Eastman Kodak Company.

Del Bigio, MR. (2001) Pathophysiologic consequences of hydrocephalus. Neurosurg Clin N Am 36(4):639–649.

DelTerzo, S; Behl, CR; Nash, RA; et al. (1986) Evaluation of the nude rat as a model: effects of short-term freezing and alkyl chain length on the permeabilities of n-alkanois and water. J Soc Cosmet Chem 37:297–307.

Deters, M; Siegers, CP; Strubelt, O. (1998a) The influence of 4-methylpyrazole on the acute hepatotoxic actions of seven aliphatic alcohols. Res Commun Alcohol Subst Abuse 19(1-2):37–46.

Deters, M; Siegers, CP; Strubelt, O. (1998b) Influence of glycine on the damage induced in isolated perfused rat liver by five hepatotoxic agents. Toxicology 128:63–72.

Dickson, PA; James, MR; Heath, AC, et al. (2006) Effects of variation at the ALDH2 locus on alcohol metabolism, sensitivity, consumption, and dependence in Europeans. Alcohol Clin Exp Res 30(7):1093–1100.

Dietz, FK; Rodriguez-Giaxola, M; Traiger, GJ; et al. (1981) Pharmacokinetics of 2-butanol and its metabolites in the rat. J Pharmacokinet Biopharm 9(5):33–76.

Dildy-Mayfield, JE; Mihic, SJ; Liu, Y; et al. (1996) Actions of long chain alcohols on GABAA and glutamate receptors: relation to in vivo effects. Br J Pharmacol 118:378–384.

Ding, J; Badwey, JA. (1994) Wortmannin and 1-butanol block activation of a novel family of protein kinases in neutrophils. FEBS Lett 348:149–152.

DiVincenzo, GD; Hamilton, ML. (1979a) Fate of n-butanol in rats after oral administration and its uptake by dogs after inhalation or skin application. Toxicol Appl Pharmacol 48:317–325.

DiVincenzo, GD; Hamilton, ML. (1979b) Metabolic fate of [1-14C]isobutyric acid in the rat. Toxicol Appl Pharmacol 47:609–612.

ECETOC (European Centre for Ecotoxicology and Toxicology of Chemicals). (2003) n-Butanol (CAS No. 71-36-3). JACC No. 41. Brussels, Belgium.

Edelfors, S; Ravn-Jonsen, A. (1990) The effects of alcohols in vitro on the nervous cell membrane measured by changes in the (Ca2+/Mg2+) ATPase activity and fluidity of the synaptosomal membrane. Pharmacol Toxicol 67(1):56–60.

Ema, M; Hara, H; Matsumoto, M; et al. (2005) Evaluation of developmental toxicity of 1-butanol given to rats in drinking water throughout pregnancy. Food Chem Toxicol 43:325–331.

Etique, N; Chardard, D; Chesnel, A; et al. (2004) Analysis of the effects of different alcohols on MCF-7 human breast cancer cells. Ann NY Acad Sci 1030:78–85.

Frantik, E; Hornychova, M; Horvath, M. (1994) Relative acute neurotoxicity of solvents: isoeffective air concentrations of 48 compounds evaluated in rats and mice. Environ Res 66(2):173–185.

Gadberry, MG; Carlson, GP. (1994) 2-Butanol metabolism by rat hepatic and pulmonary cytochromes P450. Toxicol Lett 74:203–209.

Gastaldi, G; Casirola, D; Ferrari, G; et al. (1991) The effect of ethanol and other alcohols on morphometric parameters of rat small intestinal microvillous vesicles. Eur J Basic Appl Histochem 35(2):185–193.

Giknis, MLA; Clifford, CB. (2008) Clinical laboratory parameters for Crl:WI(Han). Charles River, 1–14.

Godden, EL; Harris, RA; Dunwiddie, TV. (2001) Correlation between molecular volume and effects of n-alcohols on human neuronal nicotinic acetylcholine receptors expressed in Xenopus oocytes. J Pharmacol Exp Ther 296:716–722.

Gordon, EL; Nguyen, TS; Ngai, AC; et al. (1995) Differential effects of alcohols on intracerebral arterioles. Ethanol alone causes vasoconstriction. J Cereb Blood Flow Metab 15(3):532–538.

Grobin, AC; Matthews, DB; Devaud, LL; et al. (1998) The role of $GABA_A$ receptors in the acute and chronic effects of ethanol. Psychopharmacology 139:2–19.

Gupta, U; Cook, JC;Tassinari, MS; et al. (2003) Comparison of developmental toxicology of aspirin (acetylsalicylic acid) in rats using selected dosing paradigms. Birth Defects Res B Dev Reprod Toxicol. 68:27–37.

Hansch, C; Leo, A; Hoekman, D. (1995) In: Heller, SR; ed. Exploring QSAR. Hydrophobic, electronic, and steric constants. Washington, DC: American Chemical Society; p. 10.

Harris, T; Graber, AR; Covarrubias, M. (2003) Allosteric modulation of a neuronal K+ channel by 1-alkanols is linked to key residue in the activation gate. J Cell Physiol 285:C788–C796.

Hempel-Jorgensen, A; Kjaergaard, SK; Molhave, L. (1998) Cytological changes and conjunctival hyperemia in relation to sensory eye irritation. Int Arch Occup Environ Health 71(4):225–235.

Hempel-Jorgensen, A; Hudnell, HK; Kjaergaard, SK; et al. (1999) Time course of sensory eye irritation in humans exposed to n-butanol and 1-octene. Arch Environ Health 54(2):86–94.

Hiller, JM; Angel, LM; Simon, EJ. (1984) Characterization of the selective inhibition of the delta subclass of opioid binding sites by alcohols. Mol Pharmacol 25(2):249–255.

Hines, LM; Stampfer, MJ; Ma, J; et al.Gaziano, JM; Ridker, PM; Hankinson, SE; Sacks, F; Rimm, EB; Hunter, DJ (200(2001). Genetic variation in alcohol dehydrogenase and the beneficial effect of moderate alcohol consumption on myocardial infarction. N Engl J Med. 2001 Feb 22;344(8):549–555.

HSDB (Hazardous Substances Data Bank). (2009) n-Butyl alcohol. Hazardous Substances Data Bank. National Library of Medicine. Available online at http://toxnet.nlm.nih.gov/cgi-bin/sis/htmlgen?HSDB (accessed on August 16, 2009).

Jang, JY; Lee, SY; Kim, JI; et al. (1999) Application of biological monitoring to the quantitative exposure assessment for neuropsychological effect by chronic exposure to organic solvents. Int Arch Occup Environ Health 72(2):107–114.

Jenner, PM; Hagan, EC; Taylor, JM; et al. (1964) Food flavourings and compounds of related structure. I. Acute oral toxicity. Food Cosmet Toxicol 2:327–343.

Jung, R; Engelhart, G; Herbolt, B; et al. (1992) Collaborative study of mutagenicity with *Salmonella typhimurium* TA102. Mutat Res 278(4):265–270.

Kaneko, T; Wang, PY; Sato, A. (1994) Partition coefficients of some acetate esters and alcohols in water, blood, olive oil, and rat tissues. Occup Environ Med 51(1):68–72.

Kjaergaard, S; Molhave, L; Jorgensen, AH. (1997) Relation between local eye irritation testing and whole body irritation response using n-butanol as a model substance. U.S. Environmental Protection Agency, Office of Research and Development. EPA/600/A-97/014. PB193817.

Kolesnikov, PA. (1975) Adaptation to butyl alcohol. Gig I Sanit 5:104-105.

Korsak, Z; Rydzynski, K. (1994) Effects of acute combined inhalation exposure to n-butyl alcohol and n-butyl acetate in experimental animals. Int J Occup Environ Health 7(3):273–280.

Korsak, Z; Swiercz, R; Jedrychowski, R. (1993) Effects of acute combined exposure to n-butyl alcohol and m-xylene. Pol J Occup Med Environ Health 6(1):35–41.

Korsak, Z; Wisniewska-Knypl, J; Swiercz, R. (1994) Toxic effects of subchronic combined exposure to n-butyl alcohol and m-xylene in rats. Int J Occup Med Environ Health 7(2):155–166.

Kotter, K; Klein, J. (1999) Ethanol inhibits astroglial cell proliferation by disruption of phospholipase D-mediated signaling. J Neurochem 73(6):2517–2523.

Kotter, K; Jin, S; Klein, J. (2000) Inhibition of astroglial cell proliferation by alcohols: interference with the protein kinase C-phospholipase D signaling pathway. Int J Dev Neurosci 18(8):825–831.

Kowalczyk, CL; Stachecki, JJ; Schultz, JF; et al. (1996) Effects of alcohols on murine preimplantation development: relationship to relative membrane disordering potency. Alcohol Clin Exp Res 20(3):566–571.

Krill, SL; Knutson, K; Higuchi, WI. (1993) The influence of iso-propanol, n-propanol and n-butanol on stratum corneum lipid phase behavior. J Control Release 25:31–42.

Kristiansen, U; Vinggaard, AM; Nielsen, GD. (1988) The effects of n-butanol vapour on respiratory rate and tidal volume. Arch Toxicol 61:229–236.

Kulig, B; Alleva, E; Bignami, G; et al. (1996) Animal behavioral methods in neurotoxicity assessment: SGOMSEC Joint Report. Environ Health Perspect 104 (Suppl 2):193-204.

Lasne, C; Gu, ZW; Venegas, W; et al. (1984) The in vitro micronucleus assay for detection of cytogenetic effects induced by mutagen-carcinogens: Comparison with the in vitro sister-chromatid exchange assay. Mutat Res 130(4):273–282.

Lewis, RJ. (2000) Sax's dangerous properties of industrial materials. 10th ed. New York, NY: John Wiley & Sons, Inc.; p. 611.

Lide, DR; ed. (2008) CRC handbook of chemistry and physics. 88th ed. New York, NY: CRC Press; p. 3–74.

Lindahl, R. (1977). Aldehyde dehydrogenase in 2-acetamidofluorene-induced rat hepatomas. Ontogeny and evidence that the new isoenzymes are not due to normal gene de-repression. Biochem J. 164(1):119–123.

Lovinger, DM; White, G; Weight, FF. (1989) Ethanol inhibits NMDA-activated ion current in hippocampal neurons. Science 243(4899):1721–1724.

Macht, DI. (1920) A toxicological study of some alcohols, with special reference to isomers. J Pharmacol Exp Ther 16:1–10.

Maickel, RP; Nash, JF. (1985) Differing effects of short-chain alcohols on body temperature and coordinated muscular activity in mice. Neuropharmacology 24(1):83–89.

Mascia, MP; Trudell, JR; Harris, RA. (2000) Specific binding sites for alcohols and anesthetics on ligand-gated ion channels. Proc Natl Acad Sci USA 97(16):9305–9310.

McCann, J; Choi, E; Yamasaki, E; et al. (1975) Detection of carcinogens as mutagens in the Salmonella/microsome test: Assay of 300 chemicals. Proc Natl Acad Sci USA 72(12):5135–5139.

McCreery, MJ; Hunt, WA. (1978) Physico-chemical correlates of alcohol intoxication. Neuropharmacology 17:451–461.

McKarns, SC; Hansch, C; Caldwell, WS; et al. (1997) Correlation between hydrophobicity of short-chain aliphatic alcohols and their ability to alter plasma membrane integrity. Fundam Appl Toxicol 36:62–70.

McLain, VC. (2008) Final report of the addendum to the safety assessment of n-butyl alcohol as used in cosmetics. Int J Toxicol 27 (Suppl 2):53–69.

McOmie, WA; Anderson, HH. (1949) Comparative toxicologic effects of some isobutyl carbinols and ketones. Pharmacology 2:217–230.

Mohler, FS; Gordon, CJ. (1991) Hypothermic effects of a homologous series of short-chain alcohols in rats. J Toxicol Environ Health 32(2):129–139.

Muller, W; Engelhart, G; Herbold, B; et al. (1993) Evaluation of mutagenicity testing with *Salmonella typhimurium* TA102 in three different laboratories. Environ Health Perspect 101(Suppl. 3):33–36.

Munch, JC. (1972) Aliphatic alcohols and alkyl esters: narcotic and lethal potencies to tadpoles and to rabbits. Ind Med 41:31–33.

Munch, JC; Schwartze, EW. (1925) Narcotic and toxic potency of aliphatic alcohols upon rabbits. J Lab Clin Med 10:985–996.

Munoz, R; Ferreras, JM; Iglesias, R; et al. (1990) Adaption of in vitro rat brain protein synthesis to long-term ingestion of n-butanol. Brain Res 517:330–332.

Munoz, R; Iglesias, R; Ferreras, JM; et al. (1991) Effect of long-term n-butanol ingestion on rat brain polypeptide synthesis directed by endogenous messengers. Cell Mol Biol 37(7):671–677.

Murata, K; Araki, S; Yokoyama, S; et al. (1991) Autonomic and peripheral nervous system dysfunction in workers exposed to mixed organic solvents. Int Arch Occup Environ Health 63(5):335–340.

Nakahiro, M; Arakawa, O; Narahashi, T. (1991) Modulation of gamma-aminobutyric acid receptor-channel complex by alcohols. J Pharmacol Exp Ther 259(1):235–240.

Nakamura, S; Oda, Y; Shimada, T; et al. (1987) SOS-inducing activity of chemical carcinogens and mutagens in Salmonella typhimurium TA1535/pSK1002: examination with 151 chemicals. Mutat Res 192:239–246.

Nelson, KW; Ege, JF; Ross, M; et al. (1943) Sensory response to certain industrial solvent vapors. J Ind Hyg Toxicol 25:282–285.

Nelson, BK; Brightwell, WS; Khan, A; et al. (1989a) Lack of selective developmental toxicity of three butanol isomers administered by inhalation to rats. Fundam Appl Toxicol 12:469–479.

Nelson, BK; Brightwell, WS; Robertson, SK; et al. (1989b) Behavioral teratology investigation of 1-butanol in rats. Neurotoxicol Teratol 11(3):313–315.

Nelson, BK; Brightwell, WS; Krieg, EFJ. (1990) Developmental toxicology of industrial alcohols: a summary of 13 alcohols administered by inhalation to rats. Toxicol Ind Health 6(3-4):373–387.

NRC (National Research Council). (1983) Risk assessment in the federal government: managing the process. Washington, DC: National Academy Press.

Obe, G; Ristow, H. (1977) Acetaldehyde, but not ethanol, induces sister chromatid exchanges in Chinese hamster cells in vitro. Mutat Res 56:211–213.

Obe, G; Ristow, HJ; Herha, J. (1977) Chromosomal damage by alcohol in vitro and in vivo. Adv Exp Med Biol 85A:47–70.

OECD. (2001) N-butyl alcohol. SIDS initial assessment report for SIAM 13. United Nations Environment Programme. http://www.chem.unep.ch/irptc/sids/oecdsids/71363.pdf (accessed August 2, 2011).

O'Neil, MJ; Heckelman, PE; Koch, CB; et al. (2006) The Merck index. 14th ed. Whitehouse Station, NJ: Merck & Co. Inc.; p. 253.

Onfelt, A. (1987) Spindle disturbances in mammalian cells. III. Toxicity, c-mitosis and aneuploidy with 22 different compounds. Specific and unspecific mechanisms. Mutat Res 182:135–154.

Peoples, RW; Weight, FF. (1999) Differential alcohol modulation of GABAA and NMDA receptors. Neuroreport 10(1):97–101.

Podlekareva, D; Pan, Z; Kjaergaard, S; et al. (2002) Irritation of the human eye mucous membrane caused by airborne pollutants. Int Arch Occup Environ Health 75(5):359–364.

Poet, TS; Corley, RA; Woodstock, A. (2003a) Evaluation of the respiratory bioavailability and pharmacokinetics of a series of esters and alcohols in rats. Richland, WA: Batelle, Pacific Northwest National Laboratory.

Poet, TS; Creim, JA; Pierce, JT; et al. (2003b) Evaluation of the respiratory bioavailability and pharmacokinetics of butyl acetate using whole-body plethysmography and gas uptake inhalation. Richland, WA: Batelle, Pacific Northwest National Library.

Purchase, IFH. (1969) Studies in Kaffircorn malting and brewing. XXII. The acute toxicity of some fusel oils found in Bantu beer. S Afr Med J 43(25):795–798.

Raimondi AJ. (1994) A unifying theory for the definition and classification of hydrocephalus. Childs Nerv Syst 10:2–12.

RTI (Research Triangle Institute). (1985) Rat oral subchronic toxicity study. Submitted under TSCA Section 4; EPA Document No. 44-8630046; NTIS No. OTS0531032.

Rumyantsev, AP; Ostroumova, NA; Astapoval, SA; et al. (1976) Sanitary toxicological features of butyl alcohol under conditions of prolonged inhalation route entry. Gig Sanit 11:12–15. (Russian)

Rumyanstev, AP; Lobanova, IY; Tiunova, LV; et al. (1979) Toxicology of butyl alcohol. Khimicheskaia promyshlennost Seriia toksikologiia I sanitarnaia khimia plastmass 2:24–26. (Russian)

Rusch, D; Musset, B; Wulf, H; et al. (2007) Subunit-dependent modulation of the 5-hydroxytryptamine type 3 receptor open-close equilibrium by n-alcohols. J Pharmacol Exp Ther 321(3):1069–1074.

Sakata-Haga, H; Sawada, K; Ohnishi, T; et al. (2004) Hydrocephalus following prenatal exposure to ethanol. Acta Neuropathol (Berl) 108:393–398.

Scheuplein, RJ; Blank, IH. (1976) Mechanism of percutaneous absorption. IV. Penetration of nonelectrolytes (alcohols) from aqueous solutions and from pure liquids. J Invest Dermatol 60:286–296.

Seitz, B. (1972) Occurrence of serious vertigo after handling of butanol and isobutanol: three cases. Archives Mal Prof Med Trav Secur Soc 33:393–395. (French)

Shahidullah, M; Harris, T; Germann, MW; et al. (2003) Molecular features of an alcohol binding site in a neuronal potassium channel. Biochemistry 42:11243–11252.

Shehata, M; Saad, S. (1978) The effect of aliphatic alcohols on certain vitamins of the B-complex group in the liver of the rat. Pol J Pharmacol Pharm 30(1):35–38.

Sitarek, K; Berlinska, B; Baranski, B. (1994) Assessment of the effect of n-butanol given to female rats in drinking water on fertility and prenatal development of their offspring. Int J Occup Med Environ Health 7(4):365–370.

Smyth, HF; Smyth, HFJ. (1928) Inhalation experiments with certain laquer solvents. J Ind Hyg 10:261–271.

Smyth, HF; Carpenter, CP; Weil, CS. (1951) Range-finding toxicity data: list IV. Arch Ind Hyg Occup Med 4:119–122.

Sterner, JH; Crouch, HC; Brockmyre, HF; et al. (1949) A ten-year study of butyl alcohol exposure. Am Ind Hyg Assoc Q 10(3):53–59.

Stevens, R; Rusch, D; Solt, K; et al. (2005) Modulation of human 5-hydroxytryptamine type 3AB receptors by volatile anesthetics and n-alcohols. J Pharmacol Exp Ther 314(1):338–345.

Strubelt, O; Zetler, G. (1980) Anti-inflammatory effect of ethanol and other alcohols on rat paw edema and pleurisy. Agents Actions 10(3):279–286.

Strubelt, O; Deters, M; Pentz, R; et al. (1999) The toxic and metabolic effects of 23 aliphatic alcohols in the isolated perfused rat live. Toxicol Sci 49:133–142.

Sullivan EV, Harris RA, and Pfefferbaum A (2010). Alcohol's Effects on Brain and Behavior. Alcohol Research and Health 33: 127-143.

Swiercz, R; Korsak, Z; Rydzynski, K. (1995) Kinetics of n-butyl alcohol and m-xylene in blood during single and combined inhalation exposure in rats. Int J Occup Med Environ Health 8(4):361–365.

Tabershaw, IR; Fahy, JP; Skinner, JB. (1944) Industrial exposure to butanol. J Ind Hyg Toxicol 26:328–330.

Teeguarden, JG; Deisinger, PJ; Poet, TS; et al. (2005) Derivation of a human equivalent concentration for n-butanol using a physiologically based pharmacokinetic model for n-butyl acetate and metabolites n-butanol and n-butyric acid. Toxicol Sci 85:429–446.

Teschke, R; Hasumura, Y; Lieber, CS. (1974) NADPH-dependent oxidation of methanol, ethanol, propanol and butanol by hepatic microsomes. Biochem Biophys Res Commun 60(2):851–857.

Tewari, YB; Miller, MM; Wasik, SP; et al. (1982) Aqueous solubility and octanol/water partition coefficient of organic compounds at 25.0C. J Chem Eng Data 27:451–454.

Thibault, R; Blachier, F; Darcy-Vrillon, B, et al. (2010) Butyrate utilization by the colonic mucosa in inflammatory bowel diseases: a transport deficiency. Inflamm Bowel Dis 16(4):684–695.

Timms, GP; Holmes, RS. (1981) Genetics and ontogeny of aldehyde dehydrogenase isozymes in the mouse: evidence for a locus controlling the inducibility of the liver microsomal isozyme. Biochem Genet 19(11–12):1223–1236.

Triebig, G; Schaller, KH; Weltle, D. (1992) Neurotoxicity of solvent mixtures in spray painters. Int Arch Occup Environ Health 64(5):353–359.

Tucek, M; Tenglerova, M; Kvasnickova, M; et al. (2002) Effect of acrylate chemistry on human health. Int Arch Occup Environ Health 75(Suppl 1):S67–S72.

U.S. EPA (Environmental Protection Agency). (1986a) Guidelines for the health risk assessment of chemical mixtures. Federal Register 51(185):34014-34025. Available online at http://www.epa.gov/iris/backgrd.html (accessed April 20, 2010).

U.S. EPA. (1986b) Guidelines for mutagenicity risk assessment. Federal Register 51(185):34006-34012. Available online at http://www.epa.gov/iris/backgrd.html (accessed April 20, 2010).

U.S. EPA. (1988) Recommendations for and documentation of biological values for use in risk assessment. Prepared by the Environmental Criteria and Assessment Office, Office of Health and Environmental Assessment, Cincinnati, OH for the Office of Solid Waste and Emergency Response, Washington, DC; EPA 600/6-87/008. Available online at http://www.epa.gov/iris/backgrd.html (accessed April 20, 2010).

U.S. EPA. (1991) Guidelines for developmental toxicity risk assessment. Federal Register 56(234):63798–63826. Available online at http://www.epa.gov/iris/backgrd.html (accessed April 20, 2010).

U.S. EPA. (1994a) Interim policy for particle size and limit concentration issues in inhalation toxicity studies. Federal Register 59(206):53799. Available online at http://www.epa.gov/iris/backgrd.html (accessed April 20, 2010).

U.S. EPA. (1994b) Methods for derivation of inhalation reference concentrations and application of inhalation dosimetry. Office of Research and Development, Washington, DC; EPA/600/8-90/066F. Available online at http://www.epa.gov/iris/backgrd.html (accessed April 20, 2010).

U.S. EPA. (1995) Use of the benchmark dose approach in health risk assessment. Risk Assessment Forum, Washington, DC; EPA/630/R-94/007. Available online at http://www.epa.gov/raf/publications/pdfs/BENCHMARK.PDF (accessed March 11, 2011).

U.S. EPA. (1998) Guidelines for neurotoxicity risk assessment. Federal Register 63(93):26926-26954. Available from: http://www.epa.gov/iris/backgrd.html (accessed April 20, 2010).

U.S. EPA. (2002) A review of the reference dose and reference concentration processes. Risk Assessment Forum, Washington, DC; EPA/630/P-02/0002F. Available online at http://www.epa.gov/iris/backgrd.html (accessed April 20, 2010).

U.S. EPA. (2005a) Guidelines for carcinogen risk assessment. Risk Assessment Forum, Washington, DC; EPA/630/P-03/001F. Available online at http://www.epa.gov/iris/backgrd.html (accessed April 20, 2010).

U.S. EPA. (2005b) Supplemental guidance for assessing susceptibility from early-life exposure to carcinogens. Risk Assessment Forum, Washington, DC; EPA/630/R-03/003F. Available online at http://www.epa.gov/iris/backgrd.html (accessed April 20, 2010).

U.S. EPA. (2006a) Science policy council handbook: peer review. Third edition. Office of Science Policy, Office of Research and Development, Washington, DC; EPA/100/B-06/002. Available online at http://www.epa.gov/iris/backgrd.html (accessed April 20, 2010).

U.S. EPA. (2006b) A framework for assessing health risk of environmental exposures to children. National Center for Environmental Assessment, Washington, DC, EPA/600/R-05/093F. Available online at http://cfpub.epa.gov/ncea/cfm/recordisplay.cfm?deid=158363 (accessed March 14, 2011).

U.S. EPA. (2009) Toxic Release Inventory- n-Butanol production. http://www.epa.gov/tri/ (accessed August 01, 2011).

U.S. EPA. (2011) Recommended Use of Body Weight 3/4 as the Default Method in Derivation of the Oral Reference Dose. Risk Assessment Forum, Washington DC, EPA/100/R11/0001F. Available online at http://www.epa.gov/raf/publications/interspecies-extrapolation.htm (accessed July 15, 2011).

Velazquez, J; Escobar, R; Almaraz, A. (1969) Audiologic impairment due to n-butyl alcohol exposition. In: Proceedings of the XVI International Congress on Occupational Health, Tokyo, Japan, 22-27 September 1969 Japan Industrial Safety Association.

Videla, LA; Fernandez, V; de Marinis, A. (1982) Liver lipoperoxidative pressure and glutathione status following acetaldehyde and aliphatic alcohols pretreatments in the rat. Biochem Biophys Res Commun 104(3):965–970.

Wakabayashi, T; Adachi, K; Popinigis, J. (1991) Effects of alkyl alcohols and related chemicals on rat liver structure and function: I. Induction of two distinct types of megamitochondria. Acta Pathol Jpn 41(6):405–413.

Wallgren, H. (1960) Relative intoxicating effects on rats of ethyl, propyl and butyl alcohols. Acta Pharmacol Toxicol (Copenh) 16:217–222.

Weichert, J; Hartge, D; Knapp, M; et al. (2010) Prevalence, characteristics and perinatal outcome of fetal ventriculomegaly in 29,000 pregnancies followed at a single institution. Fetal Diagn Ther 27:142–148.

Weese, H. (1928) Comparative studies on the efficacy and toxicity of the vapours of low aliphatic alcohols. Naunyn-Schmiedebergs Arch Exp Pathol Pharmakol 135:118–130. (German)

WHO (World Health Organization). (1987) Environmental health criteria 65. Butanols: Four isomers. United Nations Environment Programme. International Labour Organisation. World Health Organization. Available online at http://www.inchem.org/documents/ehc/ehc/ehc65.htm (accessed August 16, 2009).

Winer, AD. (1958) A note on the substrate specificity of horse liver alcohol dehydrogenase. Acta Chem Scand 12:1695–1696.

Wolford, ST; Schroer, RA; Gohs, FX; et al. (1986) Reference range data base for serum chemistry and hematology values in laboratory animals. J Toxicol Environ Health 18:161–188.

Ye, Q; Koltchine, V; Mihic, SJ; et al. (1998) Enhancement of glycine receptor function by ethanol is inversely correlated with molecular volume at position alpha267. J Biol Chem 273(6):3314–3319.

Yoshiyama, Y; Nagai, K; Some, H; et al. (1973) Selective inhibition by pantoyl lactone and butyl alcohol of the initiation of DNA replication in E. coli. Agric Biol Chem 37:1317–1320.

Zhou, Q; Verdoorn, TA; Lovinger, DM. (1998) Alcohols potentiate the function of 5-HT3 receptor-channels on NCB-20 neuroblastoma cells by favouring and stabilizing the open channel state. J Physiol 507(2):335–352.

Zuo, Y; Aistrup, GL; Marszalec, W; et al. (2001) Dual action of n-alcohols on neuronal nicrotinic acetylcholine receptors. Mol Pharmacol 60(4):700–711.

Zuo, Y; Yeh, JZ; Narahashi, T. (2003) Dual action of n-butanol on neuronal nicotinic α4β2 acetylcholine receptors. J Pharmacol Exp Ther 304(3):1143–1152.

APPENDIX A. SUMMARY OF EXTERNAL PEER REVIEW AND PUBLIC COMMENTS AND DISPOSITION

[page intentionally left blank]

APPENDIX B. BENCHMARK DOSE CALCULATIONS FOR NONCANCER QUANTIFICATION

In the study by Sitarek et al. (1994), a LOAEL of 300 mg/kg-day was identified for increased incidences of dilation of the subarachnoid space and dilation of the lateral ventricle and/or third ventricle in the brain of rat offspring. The teratogenic effects were not amenable to modeling with nested developmental toxicity dose-response models, as these models require individual animal data and such data were not reported by Sitarek et al. (1994). However, the percentages of affected litters were reported in the study; these data (see Table B-1 below) were subjected to BMD modeling to identify possible PODs for RfD derivation.

Table B-1. Incidences (percentage) of litters with dilation of the subarachnoid space and dilation of the lateral ventricle and/or third ventricle of the brain

	n-Butanol dose in mg/kg-d			
Effect	**0**	**300**	**1,000**	**5,000**
Dilation of lateral ventricle and/or third ventricle of the brain	1/12 (8%)[a]	8/14 (57%)	8/12 (67%)	7/9 (78%)
Dilation of subarachnoid space	0/12 (0%)	2/14 (14%)	3/12 (25%)	7/9 (78%)

[a] Incidence of affected litters (percentage).

Source: Sitarek et al. (1994).

All available dichotomous models in the EPA BMDS (version 2.1.1) were fit to the selected datasets (dilation of the subarachnoid space and dilation of the lateral ventricle and/or third ventricle) shown above. The BMD and BMDL associated with a 10% extra risk BMR were estimated using the best-fit model for each dataset. Of the models exhibiting adequate fit, a best-fititng model was selected consistent with the draft EPA *Benchmark Dose Technical Guidance Document* (U.S. EPA, 2000b) as follows. Briefly, if the BMDL estimates from the models exhibiting adequate fit are within a range of two- to threefold, then the model with the lowest AIC is selected. If the range of BMDLs is larger than two- to threefold (indicating some model dependence is assumed), then the model with the lowest BMDL is selected.

Detailed modeling results are shown in Tables B-2 (dilation of the lateral and/or third ventricle of the brain) and B-3 (dilation of the subarachnoid space). Figures B-1 and B-2 show the best-fitting model results for these two endpoints, respectively. For dilation of the lateral or third ventricle, the best fitting model was the log-logistic model. This was the only model with adequate fit ($p>0.1$). For dilation of the subarachnoid space, all models considered had adequate fits. BMDLs ranged more than fivefold from 121.5 to 679.7 mg/kg-d, and the model with the lowest BMDL was the log-logistic model.

Table B-2. Model predictions for the incidence of litters with dilation of the lateral ventricle and/or third ventricle of the brain after maternal exposure to n-butanol in drinking water for 8 weeks before and during pregnancy

Model	DF	χ^2	χ^2 Goodness of fit *p*-value[a]	Scaled residual of interest[b]	AIC	BMR[f]	BMD (mg/kg-d)	BMDL (mg/kg-d)
Gamma[c]	2	7.03	0.03	1.41	62.43	10% ER	300.70	143.62
Logistic	2	7.75	0.02	1.15	63.68	10% ER	598.67	332.59
Log-Logistic[d]	2	3.46	0.18	-0.24	57.60	10% ER	56.46	26.13
Log-Probit[d]	2	8.72	0.01	1.57	63.80	5% ER	26.74	12.38
Multistage (1–3 degree)[e]	2	7.03	0.03	1.41	62.43	10% ER	458.56	149.93
Probit	2	7.81	0.02	1.15	63.75	10% ER	300.70	142.62
Weibull[c]	2	7.03	0.03	1.41	62.43	10% ER	627.68	378.98

[a]Values <0.10 fail to meet conventional goodness-of-fit criteria.
[b]Scaled residual at measured response closest to the BMR.
[c]Power restricted to ≥1.
[d]Slope restricted to ≥1.
[e]Betas restricted to ≥0.
[f] ER= extra risk

BMD = maximum likelihood estimate of the dose/concentration associated with the selected BMR

Source: Sitarek et al. (1994).

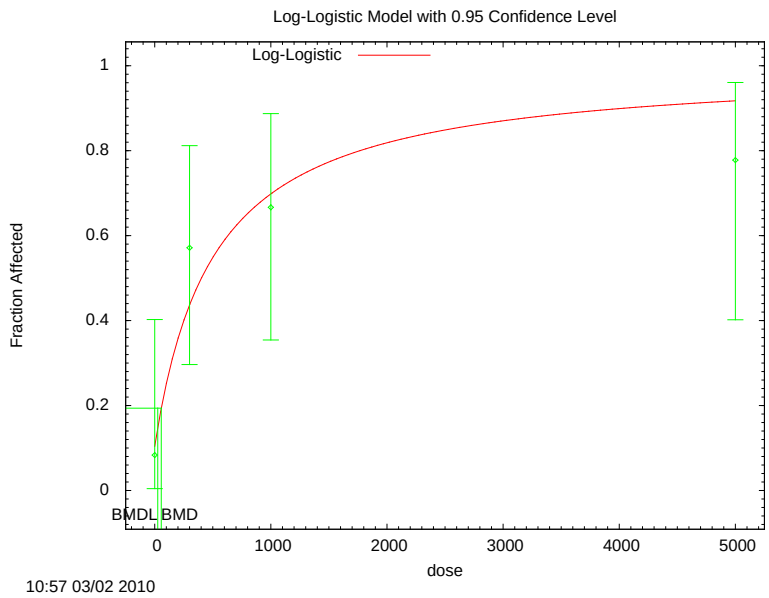

Figure B-1. Fit of log-logistic model to data on incidence of litters with dilation of the lateral ventricle and/or third ventricle of the brain.

```
=====================================================================
          Logistic Model. (Version: 2.12; Date: 05/16/2008)
          Input Data File: C:\Usepa\BMDS21\lnlDaxSetting.(d)
          Gnuplot Plotting File:  C:\Usepa\BMDS21\lnlDaxSetting.plt
                                                   Thu Mar 10 15:56:51 2011
 ====================================================================

 BMDS Model Run
~~~~~~~~~~~~~~~~~~~~~~~~~~~~~~~~~~~~~~~~~~~~~~~~~~~~~~~~~~~~~~~~~~~~~~~~~

   The form of the probability function is:

   P[response] = background+(1-background)/[1+EXP(-intercept-slope*Log(dose))]


   Dependent variable = Incidence
   Independent variable = Dose
   Slope parameter is restricted as slope >= 1

   Total number of observations = 4
   Total number of records with missing values = 0
   Maximum number of iterations = 250
   Relative Function Convergence has been set to: 1e-008
   Parameter Convergence has been set to: 1e-008


   User has chosen the log transformed model


                  Default Initial Parameter Values
                     background =    0.0833333
                      intercept =     -6.93403
                          slope =            1


           Asymptotic Correlation Matrix of Parameter Estimates

           ( *** The model parameter(s)  -slope
                 have been estimated at a boundary point, or have been specified by the user,
                 and do not appear in the correlation matrix )

             background    intercept

background            1        -0.52
```

```
 intercept        -0.52            1


                                Parameter Estimates

                                                          95.0% Wald Confidence Interval
       Variable         Estimate        Std. Err.     Lower Conf. Limit   Upper Conf. Limit
     background         0.104222            *                *                   *
      intercept         -6.23071            *                *                   *
          slope                1            *                *                   *

* - Indicates that this value is not calculated.


                        Analysis of Deviance Table

       Model      Log(likelihood)  # Param's  Deviance  Test d.f.   P-value
     Full model        -25.4083         4
   Fitted model        -26.7995         2       2.78247      2          0.2488
  Reduced model        -32.5673         1        14.318      3        0.002503
           AIC:          57.599

                                 Goodness  of  Fit
                                                                    Scaled
     Dose     Est._Prob.    Expected    Observed     Size       Residual
  ----------------------------------------------------------------------
    0.0000     0.1042         1.251     1.000          12       -0.237
  300.0000     0.4368         6.115     8.000          14        1.016
 1000.0000     0.6982         8.378     8.000          12       -0.238
 5000.0000     0.9174         8.256     7.000           9       -1.521
 Chi^2 = 3.46      d.f. = 2        P-value = 0.1775

   Benchmark Dose Computation
Specified effect =            0.1
Risk Type        =      Extra risk
Confidence level =           0.95
             BMD =          56.46
            BMDL =          26.13
```

Table B-3. Model predictions for the incidence of litters with dilation of subarachnoid space after maternal exposure to n-butanol in drinking water for 8 weeks before and during pregnancy

Model	DF	χ^2	χ^2 Goodness of fit *p*-value[a]	Scaled residual of interest[b]	AIC	BMR[f]	BMD (mg/kg-d)	BMDL (mg/kg-d)
Gamma[c]	3	0.5	0.92	0.659	36.9561	10% ER	327.6	203.9
Logistic	2	1.84	0.40	0.680	41.4115	10% ER	1,074	679.7
Log-Logistic[d]	**2**	**0.5**	**0.78**	**0.407**	**39.0168**	10% ER	**275.2**	**121.5**
						5% ER	140.9	57.6
Log-Probit[d]	2	1.69	0.43	0.982	40.611	10% ER	592.8	309.0
Multistage (1–3 degree)[e]	3	0.5	0.92	0.659	36.9561	10% ER	327.6	203.9
Probit	2	1.75	0.42	0.647	41.2461	10% ER	994.8	6643
Weibull[c]	3	0.5	0.92	0.659	36.9561	10% ER	327.6	203.9

[a]Values <0.10 fail to meet conventional goodness-of-fit criteria.
[b]Scaled residual at measured response closest to the BMR.
[c]Power restricted to ≥1.

Table B-3. Model predictions for the incidence of litters with dilation of subarachnoid space after maternal exposure to n-butanol in drinking water for 8 weeks before and during pregnancy

Model	DF	χ^2	χ^2 Goodness of fit *p*-value[a]	Scaled residual of interest[b]	AIC	BMR[f]	BMD (mg/kg-d)	BMDL (mg/kg-d)

[d]Slope restricted to ≥1.
[e]Betas restricted to ≥0.
[f] ER=extra risk.

BMD = maximum likelihood estimate of the dose/concentration associated with the selected BMR

Source: Sitarek et al. (1994).

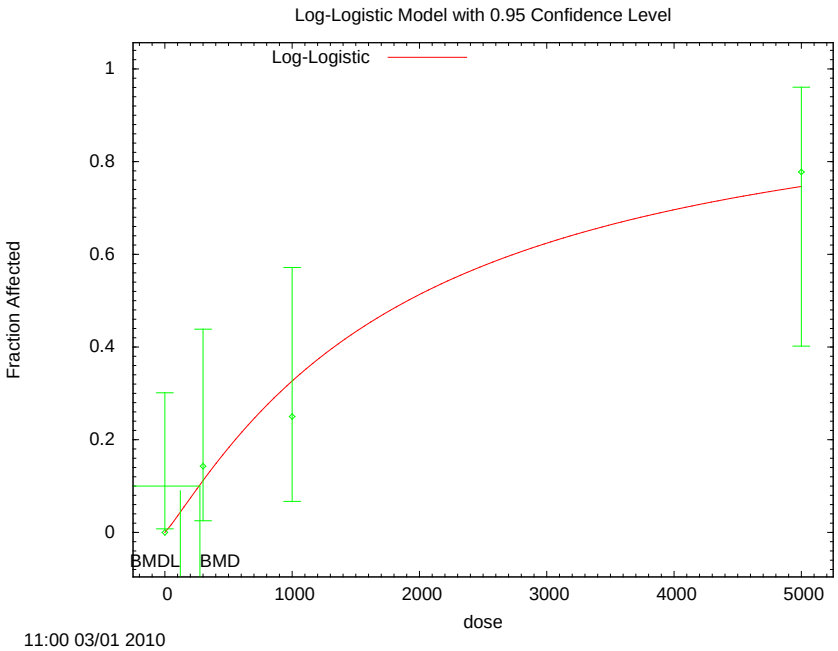

Figure B-2. Fit of log-logistic model to data on incidence of litters with dilation of subarachnoid space.

```
=================================================================
          Logistic Model. (Version: 2.12; Date: 05/16/2008)
          Input Data File: C:\Usepa\BMDS21\lnlDaxSetting.(d)
          Gnuplot Plotting File:  C:\Usepa\BMDS21\lnlDaxSetting.plt
                                                  Thu Mar 10 15:52:15 2011
 ================================================================
 BMDS Model Run
~~~~~~~~~~~~~~~~~~~~~~~~~~~~~~~~~~~~~~~~~~~~~~~~~~~~~~~~~~~~~~~~~~~~~~~~~
    The form of the probability function is:
   P[response] = background+(1-background)/[1+EXP(-intercept-slope*Log(dose))]

   Dependent variable = Incidence
   Independent variable = Dose
   Slope parameter is restricted as slope >= 1

   Total number of observations = 4
   Total number of records with missing values = 0
```

```
   Maximum number of iterations = 250
   Relative Function Convergence has been set to: 1e-008
   Parameter Convergence has been set to: 1e-008

   User has chosen the log transformed model

                  Default Initial Parameter Values
                     background =           0
                      intercept =     -8.31297
                          slope =      1.10283

           Asymptotic Correlation Matrix of Parameter Estimates
( *** The model parameter(s)  -background have been estimated at a boundary point, or have been
specified by the use and do not appear in the correlation matrix )


              intercept        slope

 intercept            1        -0.99

     slope        -0.99            1

                                 Parameter Estimates
                                                          95.0% Wald Confidence Interval
       Variable         Estimate        Std. Err.     Lower Conf. Limit   Upper Conf. Limit
     background                0            *                *                  *
      intercept         -8.46425            *                *                  *
          slope          1.11559            *                *                  *

* - Indicates that this value is not calculated.

                        Analysis of Deviance Table

       Model      Log(likelihood)  # Param's  Deviance  Test d.f.   P-value
     Full model         -17.257         4
   Fitted model        -17.5084         2      0.502756      2          0.7777
  Reduced model        -26.7009         1       18.8877      3       0.0002884

           AIC:         39.0168

                                  Goodness  of  Fit
                                                                  Scaled
     Dose     Est._Prob.    Expected    Observed     Size       Residual
  ----------------------------------------------------------------------
    0.0000     0.0000         0.000     0.000          12        0.000
  300.0000     0.1090         1.526     2.000          14        0.407
 1000.0000     0.3191         3.829     3.000          12       -0.513
 5000.0000     0.7384         6.645     7.000           9        0.269

 Chi^2 = 0.50      d.f. = 2        P-value = 0.7783

   Benchmark Dose Computation
Specified effect =           0.1
Risk Type        =      Extra risk
Confidence level =          0.95
             BMD =        275.244
            BMDL =        121.542
```

APPENDIX C. SUPPLEMENTAL INFORMATION

C.1. *Controlled Acute Exposure Experiments*

There are several controlled acute exposure studies that evaluated irritation and conditioned reflexes in humans during n-butanol exposure. These studies are summarized in Table C-1. Notable effects in the controlled acute exposure studies included increased eye, nose, and throat irritation (Podlekareva et al., 2002; Hempel-Jorgensen et al., 1999, 1998; Kjaerguard et al., 1997; Wysocki and Dalton, 1996, as cited in McLain, 2008; Cometto-Muniz and Cain, 1995; Nelson et al., 1943) and CNS effects including increased response latencies and inhibition of the blinking reflex (Baikov and Khachaturyan, 1973). Only one study (Baikov and Khachaturyan, 1973) examined toxicity effects of n-butanol beyond irritation effects.

Table C-1. Controlled acute exposure studies

Reference	Subjects	Study design and exposure	Results	Study limitations
Nelson et al., 1943	10 volunteers	Comparison of eye, throat and nasal irritation in subjects and controls. Concentrations ranging from 0 to 50 ppm (0–150 mg/m^3; groups not specified by authors) of n-butanol were administered for 3–5 min in an inhalation exposure chamber.	Eye irritation at 50 (150 mg/m^3), nose and throat irritation at 25 ppm (76 mg/m^3). Highest concentration acceptable for 8 hrs as reported by the volunteers was <25 ppm (<76 mg/m^3).	Limited information on dose concentrations.
Baikov and Khachaturyan, 1973	18 volunteers in groups of 3	Comparison of the odor threshold and effects of n-butanol (0.1–2.5 mg/m^3) on conditioned reflexes in subjects.	Odor threshold determined to be 1.2 mg/m^3. Dark adaption slowed at 1.2 mg/m^3. Statistically significant increase in response latency at 0.7 mg/m^3. Statistically significant inhibition of the conditioned blinking reflex at 1.5 and 2.5 mg/m^3. Transient development of conditioned reflex described by shifts in electrocephalograms (effective concentration not reported).	Lack of study design details; Study identified CNS effects associated with n-butanol
Cometto-Muniz and Cain et al., 1995	5 males and 5 females	n-Butanol vapors were administered to eye or nostrils for 1–3 seconds, using squeezable bottles. A 16-step dilution series was used to with the highest concentration 100% v/v and subsequent threefold dilutions (33, 11, 3.7, etc. % v/v).	Odor threshold was reported as 20 ppm (61 mg/m^3). Eye irritation threshold was reported as 3,000 ppm (9,000 mg/m^3).	Limited statistical power due to the small number of subjects.
Wysocki and Dalton, 1996, as cited in McLain, 2008	32 exposed workers 32 unexposed residents	Odor and irritation thresholds for n-butanol (99.8% pure; diluted to 26 concentrations ranging from 100% to 1.1802×10^{-10}% v/v) in acetone-exposed workers and naïve volunteers were evaluated.	Median odor detection and nasal irritation thresholds were 0.17 ppm (0.52 mg/m^3) and 2,042 ppm (6,190 mg/m^3), respectively. Acetone workers considered n-butanol to be nonirritating, while naïve subjects considered the exposure to have irritating properties.	Included a group exposed to one other solvent (acetone).
Kjaerguard et al., 1997	6 men and 6 women	Eye irritant effects of n-butanol after local (eye only) exposure and whole-body exposure in volunteers were evaluated. Doses of n-butanol used in the study were 1,500–12,000 mg/m^3 for 2 min intervals (lowest to highest) in goggle experiments and 0, 2.5, 5, and 10 mg/m^3 in chamber experiments.	Statistically significant association (by repeated-data multiple analysis of variance) between exposure concentration, general irritation, eye irritation, throat irritation, odor irritation, nose irritation, air quality, and continuously-measured irritation by potentiometer. Analysis suggests an	Only irritation effects were evaluated; no systemic toxicity effects were examined.

Table C-1. Controlled acute exposure studies

Reference	Subjects	Study design and exposure	Results	Study limitations
			interaction between individual threshold for eye irritation in the goggle experiment and several other measures of irritation (general irritation, eye irritation, and throat irritation.	
Hempel-Jorgensen et al., 1999, 1998	8 subjects	Evaluated eye irritation associated with eye-only exposure to n-butanol n-butanol at (0, 99, 314, or 990 ppm (0, 300, 952, or 3,000 mg/m^3 for periods of 15 or 60 min) and the results of conjunctival hyperemia evaluations using photographs of eyes before and after exposure, and conjunctival fluid cytology measured by optical microscopy. One eye was exposed to n-butanol and the other to CO_2.	The average irritation intensity was estimated for each second of the 60-min exposure and plotted to show the time course of irritation. Eye irritation intensity did not differ among the various concentrations of n-butanol and exposure to clean air. The mean conjunctival hyperemia score in subjects exposed to 990 ppm (3,000 mg/m^3) n-butanol was statistically significantly higher (1.40 ± 0.76 on a scale from -2 to +2) than the score after exposure to clean air (0.48 ± 0.96). Conjunctival cytology was not affected by exposure to n-butanol at any concentration.	n-Butanol exposures in the study were not high enough to result in ocular irritation.
Podlekareva et al., 2002	9 subjects	Compared physiological evidence of irritation after eye-only exposure to either n-butanol, CO_2, or clean air. n-Butanol and CO_2 exposures were designed to stimulate the same perceived level of irritation (50% of maximal on a linear scale).	Eye exposure to n-butanol did not result in a significant change in tear film stability or conjunctival corrosion measures.	Limited statistical power due to the small number of subjects.

C.2. OTHER DURATION- OR ENDPOINT-SPECIFIC STUDIES

C.2.1. Acute and Short-term (≤ 30 Days) Studies

Liver Toxicity

Videla (1982) administered a single oral dose of 560 mg/kg n-butanol (purity not reported) to groups of four male Wistar rats. Levels of reduced glutathione (GSH), diene conjugates, proteins, and ADH activity in the liver were measured 6 hours after dosing. Based on visual inspection of data presented graphically, levels of GSH were lower, and diene conjugates were higher in animals given n-butanol compared with saline-treated controls; however, the differences were small and not statistically significant. ADH activity in n-butanol treated rat livers was about 41% of that in ethanol-treated rat livers; however, information on controls was not reported.

Shehata and Saad (1978) evaluated the effect of oral exposure to alcohols on vitamin content in the livers of rats. Groups of six male albino rats were given daily gavage doses of 0, 1, or 2 mL/kg (810 and 1,620 mg/kg) n-butanol for 7 consecutive days. The animals were sacrificed 2 hours after the last dose and the liver was assayed for content of thiamine, riboflavin, pyridoxine, niacin, and pantothenic acid. At both doses of n-butanol, the liver content of all five vitamins was statistically significantly lower than the corresponding control value. The decreases, which were dose-related, ranged between 25 and 49% at the high dose.

Immunotoxicity

Strubelt and Zetler (1980) tested the antiinflammatory effects of n-butanol and other alcohols. Groups of eight male Wistar rats were given single gavage doses of 0, 600, or 1,200 mg/kg n-butanol (analytical purity not further specified), followed 15 minutes later with an injection of 0.1 mL of 1% carageenan in the right hind paw. Inflammation of the paw was measured as the mean difference from pretreatment paw volume at 2, 3, 4, 5, and 5 hours following injection. Exposure to n-butanol resulted in reduced inflammation, as shown by a statistically significant inhibition of the increase in paw volume associated with carageenan injection (19 and 15% smaller mean increase in paw volume compared with controls in the low- and high-dose groups, respectively). Similar inhibition of inflammation was observed with other alcohols. In a separate experiment, groups of 12–16 male Wistar rats were treated with single gavage doses of 0, 300, 600, or 1,200 mg/kg followed by injection of 0.2 mL of 1% carageenan into the pleural cavity. After a period of 4 hours, the rats were sacrificed and their chest cavities were opened. The volume of exudate was recorded, and leukocyte count and osmolality of the exudate were measured; blood osmolality was also measured. Exposure to n-butanol at ≥600 mg/kg resulted in statistically significantly reduced volume of pleural exudate (53 and 13% of control volume at 600 and 1,200 mg/kg, respectively) and decreased leukocyte count (51 and 9% of control count, respectively), indicating a reduction in the inflammatory response to

carageenan. The osmolality of pleural exudates was not affected by exposure. Significant changes in blood osmolality were observed at the low and high doses, but not the mid-dose. The blood osmolality changes were not consistent with dose; the low dose resulted in a decrease in osmolality, while the high dose resulted in an increase. This study suggested that oral exposure to n-butanol results in anti-inflammatory effects. EPA considers the information reported in this publication as inadequate for the purpose of determining effect levels.

Neurotoxicity

Wallgren (1960) tested the behavior of 5-month-old rats (strain not reported, groups of 5–7/sex) exposed to a single oral dose of 0.0163 mol/kg n-butanol (1,210 mg/kg). Beginning 20 minutes after dosing, the animals were subjected to six "tilted plane" tests at 20-minute intervals. In this test, the angle at which a rat slides after being placed head up on a tilted plane was recorded. Results were reported as lowest and mean percentage of control performance; for n-butanol, the lowest value in the six tests corresponded to 55.8 ± 1.7% of control and the mean of the six tests was 73.3 ± 9.2% of control. Statistical analysis was not reported.

Maickel and Nash (1985) treated groups of 23–25 male Swiss-Cox mice to oral doses of 500, 1,000, or 2,000 mg/kg n-butanol and assessed body temperature (via rectal thermometer) and rotorod performance in groups of five mice each at 10, 20, 40, 80, and 120 minutes after treatment. Blood was collected for analysis of n-butanol at the same time points. Treatment with n-butanol resulted in dose-dependent decreases in body temperature that persisted through 40 minutes after exposure in all groups and through 80 minutes in the mid- and high-dose groups. n-Butanol doses of 1,000 and 2,000 mg/kg resulted in dose-related decreases in rotorod performance (65 and 25% of baseline, respectively, 10 minutes after exposure, based on visual inspection of data presented graphically). Rotorod performance gradually improved over time until it was 100% of baseline by 80 minutes (at 1,000 mg/kg) or 120 minutes (at 2,000 mg/kg) after dosing. Exposure to n-butanol at 500 mg/kg did not affect rotorod performance.

In a short-term study of a series of industrial solvents, De Ceaurriz et al. (1983) exposed groups of 10 male Swiss OF1 mice for 4 hours to n-butanol (98.5% pure) concentrations of 0, 470, 548, 844, or 965 ppm (0, 1,420, 1,660, 2,560, or 2,930 mg/m^3). Vapors were generated using either an injector with added heat to increase vaporization or by bubbling air through a vial containing the test material (the authors did not specify which method was used for n-butanol). After exposure, each animal was tested in a "behavioral despair" swimming test, in which it was immersed in water in a glass cylinder and observed for duration of immobility (passive floating). A concentration-related, statistically significant decrease in the duration of immobility during the first 3 minutes of testing (i.e., prolongation of escape-directed activity) was observed at all of the exposure concentrations; the percent decreases from control were 38, 47, 60, and 70% in the low- through high-exposure groups. The concentration of n-butanol resulting in 50% decrease in immobility was reported to be 617 ppm (95% confidence interval [CI] 547–681), or

1,870 mg/m^3. According to the authors, a decrease in immobility in this test is characteristic of compounds with antidepressant activity.

In a study designed to investigate the potential ototoxicity of solvent exposure, Crofton et al. (1994) exposed groups of 10 adult male Long-Evans rats via whole-body inhalation to n-butanol vapor concentrations of 0 or 4,000 ppm (12,126 mg/m^3), 6 hours/day for 5 days. Auditory function was tested via reflex modification audiometry 5–8 weeks after exposure. There was no effect of n-butanol exposure on the auditory threshold of rats through the frequency range that was tested (0.4–40 kHz).

Frantik et al. (1994) tested the acute neurotoxicity of n-butanol in male albino SPF Wistar rats and in female mice (H strain). Groups of four male rats were exposed (whole-body) to n-butanol vapors for 4 hours, while groups of 16 female mice were exposed for 2 hours. The tested concentrations were not reported, as the focus of the analysis was to identify isoeffective concentrations for the different solvents. Within a minute after the exposure period ended, the investigators applied a short electrical impulse through electrodes in the ears of the tested animals to generate a tonic extension of hindlimbs in rats and mice. The only n-butanol effect information presented by the authors was the estimated concentration evoking a 30% depression in these parameters (3,500 ppm [10,000 mg/m^3] in rats and 2,400 ppm [7,300 mg/m^3] in mice).

A series of studies (Korsak and Rydzynski, 1994; Korsak et al., 1993) evaluated the acute neurobehavioral effects of n-butanol in rats exposed via inhalation. In the first study (Korsak et al., 1993), groups of male Wistar rats (10/group) were exposed for 4 hours to various concentrations of n-butanol. Immediately after exposure, the rats were tested for rotorod performance, and an hour after exposure ended, spontaneous motor activity was assessed. The authors estimated the medial effective concentrations (EC_{50}) for the rotorod performance to be 6,531 ppm (19,800 mg/m^3). In the tests of spontaneous motor activity, low concentrations of n-butanol were associated with increased activity (compared with control animals), while higher concentrations reduced activity back to control levels (based on data presented graphically).

The second study (Korsak and Rydzynski, 1994) also exposed groups of 10 male Wistar rats to various concentrations of n-butanol for 4 hours, and tested rotorod performance immediately after exposure. An hour after exposure ended, pain sensitivity (measured as latency to paw lick response on a hot plate) was assessed. The authors estimated the EC_{50} value for disturbance of rotorod performance to be 7,559 ppm (22,920 mg/m^3) in this study; this is similar to the value (6,531 ppm) estimated by Korsak et al. (1993). Hot plate behavior was also affected by exposure. The EC_{50} estimated by Korsak and Rydzynski (1994) for decreased sensitivity to pain was 5,901 ppm (17,890 mg/m^3) (95% CI 4,841–7,232 ppm).

In a study using intraperitoneal (i.p.) administration of n-butanol, McCreery and Hunt (1978) compared the acute neurotoxic potencies of 62 compounds in an attempt to correlate potency with physical-chemical parameter such as the membrane/buffer partition coefficient. Male Sprague-Dawley rats (number/group not specified) received a single i.p. injection of the

compound in various doses. Neurotoxic potency was assessed after dosing (duration of observation not reported) and characterized as the dose that caused pronounced impairment of gait (ataxia) and motor incoordination without causing the abdomen or pelvis to drop (the authors termed this dose the ED_3). The ED_3 for n-butanol was 5.4 mmol/kg (400 mg/kg); by comparison, the ED_3 values for the related alcohols ethanol and methanol were 32.6 and 109 mmol/kg, respectively. Neurotoxic potency showed a strong inverse correlation with membrane:buffer partition coefficient in alcohols up to a certain carbon number (C8 for straight-chain alcohols).

Pulmonary Toxicity

Kristiansen et al. (1988) evaluated the sensory irritation response in mice exposed to n-butanol vapors by assessing the reflexive decrease in respiratory rate that accompanies pulmonary irritation. Three different exposures (normal inhalation, inhalation via tracheal cannula, and i.p. injection) were tested in order to explore whether effects on respiration resulted from stimulation of receptors on the trigeminal (in the nasal mucosa) or vagal (in the lower respiratory tract) nerves, or from depression of the CNS. Groups of four male Ssc:CF-1 mice were used; a control group was exposed to clean air. For the inhalation (normal and cannulated) exposures, the mice were exposed to 0, 435, 2,500, 5,600, or 9,200 ppm (normal; or 0, 1,319, 7,579, 16,976, or 27,890 mg/m^3) or 4,630, 5,400, 7,335, or 9,250 ppm (cannulated; or 14,036, 16,370, 22,236, or 28,041 mg/m^3) of n-butanol (99.5% pure) for 30 minutes followed by a 20-minute recovery period. Respiratory rate and relative tidal volume were measured continuously using a pressure transducer attached to a body plethysmograph into which each animal was placed, with its head inserted into the exposure chamber. Doses of 1.6, 4.1, 12.1, and 20.2 mg/mouse were administered to the groups exposed via i.p. injection immediately prior to respiratory measurements for 50 minutes. The animals were observed for escape attempts as a measure of CNS depression. The relationship between percent decrease in respiratory rate and the log of the exposure concentration was plotted and used to estimate the concentrations of n-butanol that would result in a 0 or 50% reduction in respiration rate (RD_0 and RD_{50}, respectively).

The experiments showed that normal inhalation of n-butanol resulted in a concentration-related decrease in respiratory rate, with the maximum depression occurring in the first minute (Kristiansen et al., 1988). The authors estimated RD_0 and RD_{50} values of 233 and 11,696 ppm (706 and 35,456 mg/m^3), respectively, for the first minute of inhalation exposure. After the first minute, there was evidence of desensitization. The response after the first minute showed concentration-dependent patterns; at concentrations below 3,000 ppm (9,094 mg/m^3), the response leveled off, while above 3,000 ppm (9,094 mg/m^3), a secondary depression occurred. The authors suggested that the secondary response occurred as a result of stimulation of receptors in the lower respiratory tract, as a similar response occurred in the cannulated animals.

No evidence of CNS depression was evident in any of the inhalation-exposed groups; however, the decrease in respiratory rate seen with i.p.-exposed rats indicated CNS-mediated effects, as this group had no direct exposure to the respiratory tract. Comparison between results in the cannulated and i.p.-exposed groups showed a stronger response in the cannulated group, leading the authors to conclude that both CNS and lung receptors were involved in the secondary response.

Korsak and colleagues (Korsak and Rydzynski, 1994; Korsak et al., 1993) also evaluated respiratory irritation in mice exposed via inhalation. In the first study, groups of male Balb/C mice (8–10/group) were exposed for 4 hours to various concentrations of n-butanol. Respiratory rate was measured by plethysmograph before exposure, for 6 minutes during exposure, and for 6 minutes after the end of exposure. Exposure to n-butanol resulted in a concentration-dependent decrease in respiratory rate, with maximum depression occurring during the first minute of exposure. The authors estimated the RD_{50} value to be 3,008 ppm (9,119 mg/m^3). The second study (Korsak and Rydzynski, 1994) used the same protocol and estimated an RD_{50} value of 4,300 ppm (13,000 mg/m^3), which compares favorably with the value estimated by Korsak et al. (1993).

C.3. MECHANISTIC DATA AND OTHER STUDIES

Genotoxicity

n-Butanol did not increase reverse mutations in *Salmonella typhimurium* (strains TA98, TA100, A1535, and TA1537) in the presence or absence of microsomal enzyme activation (i.e., liver S9 preparations) (Muller et al., 1993; Jung et al., 1992; Nakamura et al., 1987; Connor et al., 1985; McCann et al., 1975). Obe and Ristow (1977) did not observe an increase in the frequency of sister chromatid exchanges in the Chinese hamster ovary cell, and no increase in the frequency of micronuclei was observed in Chinese hamster cells (V79) treated with a concentration of 50 µL/mL of n-butanol (Lasne et al., 1984). When V79 cells were tested at a concentration of 0.1 M n-butanol, an increased frequency of polyploidy cells was observed, but survival at this concentration was only 36% (Onfelt, 1987). Yoshiyama et al. (1973) showed that n-butanol selectively suppresses the initiation of deoxyribonucleic acid (DNA) replication in irradiated *Escherichia coli* (W2252) cells. n-Butanol was also inhibited the incorporation of uridine in HeLa cells (Obe et al., 1977), suggesting inhibition of ribonucleic acid (RNA) synthesis. Using a cell-free system with calf thymus DNA, Obe et al. (1977) showed that n-butanol concentrations of 1–4% inhibited RNA transcription in a dose-dependent fashion.

Table C-2. Genotoxicity studies of n-butanol in vitro

Test system	Endpoint	Test conditions	Results[a]		Dose[b]	Reference
			Without activation	With activation[a]		
S. typhimurium TA98, TA100	Reverse mutation	Plate incorporation assay	–	–	2,000 µg/plate	Connor et al., 1985
S. typhimurium TA102		Plate incorporation assay	–	–	5,000 µg/plate	Muller et al., 1993; Jung et al., 1992
S. typhimurium TA100, TA1535, TA1537, TA98		Plate incorporation assay	–	–	10 µg/plate	McCann et al., 1975
S. typhimurium TA1535/pSK 1002	*Umu* gene expression	*Umu* test	–	–	27,000 µg/mL	Nakamura et al., 1987
E. coli (W2252)	Inhibition of DNA replication	[^{14}C]-amino acids added to *E. coli* cells prior to treatment with n-butanol; radioactive nucleic acids and proteins were then fractionized	+	ND	0.8%	Yoshiyama et al., 1973
Chinese hamster lung cells (V79)	Micronuclei	48-hr incubation	–	ND	50 µL/mL	Lasne et al., 1984
Chinese hamster lung cells (V79)	Polyploidy	Incubated with chemical for 3 hrs; harvested and examined 26 hrs later	+	ND	0.1 M	Onfelt, 1987
Chinese hamster ovary cells	Sister chromatid exchanges	Treated 1 time/d for 7 d	–	ND	0.1% (v/v)	Obe and Ristow, 1977
HeLa cells	RNA synthesis; inhibition of uridine incorporation	Treated with increasing doses for 5 min prior to treatment with [^{3}H]-uridine, then incubated for 30 min and precipitated.	+	ND	0.25%	Obe et al., 1977
Cell-free system containing calf thymus DNA	RNA synthesis; inhibition of uridine incorporation	RNA polymerase added to system after n-butanol; transcription terminated 30 min later.	+	ND	1%	Obe et al., 1977

[a]Exogenous metabolic activation used.
[b]Lowest effective dose for positive results or highest dose tested for negative or equivocal results.

+ = positive, − = negative, ND = no data

Neurological Effects

Table C-3 summarizes and provides experimental details on the electrophysiological studies conducted with n-butanol on individual neuronal ligand-gated ion channels expressed in in vitro cell lines (*Xenopus* oocyte; human embryonic kidney [HEK] cells) or mixed neurotransmitter systems in primary neuronal cell cultures. It was generally found that n-butanol dose-dependently and reversibly inhibited glutamate receptor (NMDA, kainate, and α-amino-3-hydroxyl-5-methyl-4-isoxazole-propionate [AMPA]) function (Akinshola, 2001; Peoples and Weight, 1999; Dildy-Mayfield et al., 1996; Lovinger et al., 1989) and potentiated the function of inhibitory systems such as glycine and gamma-aminobutyric acid (GABA) receptors (Mascia et al., 2000; Peoples and Weight, 1999; Ye et al., 1998; Dildy-Mayfield et al., 1996; Nakahiro et al., 1991). Three different studies (Zuo et al., 2003; Godden et al., 2001; Zuo et al., 2001) examined the effects of n-butanol on nAChRs and it could be concluded that n-butanol may act as a partial agonist on this receptor class. A few studies (Rusch et al., 2007; Stevens et al., 2005; Zhou et al., 1998) reported that n-butanol (11–22 mM) potentiated the serotonin (or 5-hydroxytryptamine [5-HT]) current. n-Butanol was reported to inhibit the function of voltage gated potassium channels (Harris et al., 2003; Shahidullah et al., 2003). However, when a residue in the S6 segment of the potassium channel was mutated from a proline (P) to an alanine (A) [P410A], the n-butanol potentiated channel function (Bhattacharji et al., 2006). Studies with rat brain membranes indicated that n-butanol interacted with delta-specific, but not kappa, opioid receptor binding sites (Hiller et al., 1984) and n-butanol increased membrane fluidity and decreased membrane adenosine triphosphatase (ATPase) activity (Edelfors and Ravn-Jonsen, 1990).

Table C-3. Study details for mechanistic data and other studies in support of the mode of action for neurological effects

Reference	Test system	Number of samples/ group	Dose or concentration range	Study protocol	Result
Studies of effects on ligand-gated ion channels					
Lovinger et al., 1989	Mouse hippocampal neurons	4 Neurons/test	0.01–25 mM	Neurons were co-exposed to 50 μM NMDA and n-butanol. Whole-cell patch clamp techniques were used to measure the elicited current from the treatments.	n-Butanol dose dependently inhibited the NMDA-glutamate receptor response in the mouse hippocampal neuron. The inhibition was reversible following a 2-min washout period.
Nakahiro et al., 1991	Primary cultures of rat dorsal root ganglion neurons	3–9 Neurons/ test	1–30 mM	Neurons were exposed to n-butanol and GABA or after GABA current had reached steady state, and the effect on current was measured using whole-cell patch-clamp technique.	Initial peak current (nondesensitized) evoked by GABA was increased with increasing n-butanol concentration; no current induced in the absence of GABA. Potency of current enhancement was positively correlated with carbon chain length and membrane:buffer partition coefficient for n-alcohols. In contrast, n-butanol at 30 mM inhibited the desensitized steady-state current induced by GABA.
Dildy-Mayfield et al., 1996	*Xenopus laevis* oocytes expressing recombinant $GABA_A$, NMDA, AMPA, or kainite receptors	4–12 Oocytes/ test	5–50 mM	Cultured oocytes expressing $GABA_A$, NMDA, AMPA, or kainite receptors were exposed to alcohols and effects on current were measured using the two-electrode voltage clamp technique.	n-Butanol potentiated the function of $GABA_A$ receptors composed of $\alpha_1\beta_1$ or $\alpha_1\beta_1\gamma_{2L}$ subunits, but inhibited the responses to NMDA, AMPA, and kainite.
Ye et al., 1998	*X. laevis* oocytes or HEK-293 cells expressing wild type or mutant glycine Rα1 or GABA ρ1 receptors or chimeric glycine Rα1/GABA ρ1 receptor	4–13 Oocytes/ test	10–20 mM	Cells were exposed to n-butanol and the effect on current was measured using whole cell patch-clamp technique.	n-Butanol exhibited a dose-related potentiation of glycine-induced currents in cells expressing wild type glycine receptors and a dose-related inhibition of submaximal GABA-induced currents in cells expressing wild type GABA ρ1 subunits. In cells expressing chimeric receptors, n-butanol potentiated GABA-induced currents and slightly inhibited glycine-induced currents.

Table C-3. Study details for mechanistic data and other studies in support of the mode of action for neurological effects

Reference	Test system	Number of samples/ group	Dose or concentration range	Study protocol	Result
Zhou et al., 1998	Neuroblastoma (NCB-20) cells	4–11 Cells/test	20 mM	Cells were exposed to n-butanol and 5-HT and the effect on current was measured using whole-cell patch-clamp technique.	n-Butanol exposure increased the initial slope, the rise time, and the measured desensitization rate of low concentrations of 5-HT (1–2 µM). It also decreased the measured desensitization rate of current evoked by 10 µM 5-HT, and increased the relative amplitude of steady-state to peak current evoked by 2 or 10 µM 5-HT.
Peoples and Weight, 1999	Primary cultures of hippocampal neurons from 15–17-d-old fetal mice	4–7 Neurons/ test	~0.0013–0.125 M	Neurons were exposed to n-butanol with GABA or NMDA and effects on current were measured using the two-electrode voltage clamp technique.	n-Butanol enhanced the $GABA_A$- activated ion currents and inhibited NMDA-activated currents. Anesthetic potency of n-butanol and other short-chain n-alcohols was more closely related to NMDA-modulated effects than $GABA_A$-modulated effects
Mascia et al., 2000	*X. laevis* oocytes expressing human α1(wild type) and α1(S267Q) (anesthetic-resistant mutant) glycine receptor subunits	3–9 Oocytes/test	6.6–66 mM	Cultured oocytes expressing human α1 and α1 (S267Q) glycine receptor were exposed to n-butanol, and glycine, and effects on glycine receptor function was measured using the two-electrode voltage clamp technique.	n-Butanol potentiated the glycine response in oocytes expressing wild type (α1) glycine receptors, and modestly inhibited the response in those expressing the anesthetic-resistant mutant (α1[S267Q]). Mortality of oocytes (2/5) was observed at the highest tested concentration.
Akinshola, 2001	*X. laevis* oocytes expressing recombinant AMPA GluR1 and GluR3 receptor subunits	5–8 Oocytes/test	1–1,000 mM	Cultured oocytes expressing glutamate GluR1 or GluR3 receptor subunits were treated with various concentrations of alcohols, and inhibition of kainite-activated ion-currents was measured using the two-electrode voltage clamp technique.	n-Butanol exhibited dose-related inhibition of kainite-activated currents in oocytes expressing recombinant AMPA GluR1 and GluR3 receptor subunits.
Godden et al., 2001	*X. laevis* oocytes expressing human nACh receptor subunits α_2, α_4, and β_4	3–16 Oocytes/ test	0.0001–0.1 M	Cultured oocytes expressing nACh receptor subunits α_2, α_4, and β_4 were bathed in alcohols with ACh substrate, and effect current was measured using the two-electrode voltage clamp technique.	n-Butanol potentiated the function of nACh receptors composed of $\alpha_2\beta_4$ subunits, but had no effect on receptors composed of the $\alpha_4\beta_4$ combination. Molecular volume of alcohols was shown to correlate with potency of effect on the receptors.

Table C-3. Study details for mechanistic data and other studies in support of the mode of action for neurological effects

Reference	Test system	Number of samples/ group	Dose or concentration range	Study protocol	Result
Zuo et al., 2001	HEK-293 expressing the α4β2 subunit of neuronal nACh receptors	6 Cells/test	1–300 mM	Cells were exposed to n-butanol with ACh and the effect on current was measured using whole-cell patch-clamp technique.	n-Butanol (1 and 100 mM) exhibited a dose-dependent inhibition on the effect of 30 µM ACh, and potentiated the effect at an n-butanol concentration of 300 mM. At a concentration of 30 mM, n-butanol slightly potentiated the effect of 10 µM ACh.
Zuo et al., 2003	HEK-293 expressing the α4β2 subunit of neuronal nACh receptors	6 Cells/test	1–300 mM	Cells were exposed to n-butanol and ACh and the effect on current was measured using whole-cell patch-clamp technique.	Prolonged exposure to n-butanol resulted in small currents blocked by the ACh channel blocker mecamylamine or the receptor blocker dihydro-β-erythroidine, indicating that n-butanol acted as a partial agonist. At a high concentration (300 mM), n-butanol potentiated the effects of low ACh concentrations (≤30 µM) and inhibited the effects of high ACh (100–3,000 µM). A low concentration of n-butanol (10 mM) inhibited effects of ACh (10–3,000 µM).
Stevens et al., 2005	*X. laevis* oocytes expressing 5-HT_{3A} or 5-HT_{3AB} receptors	At least three oocytes/test	11 and 22 mM	Cultured oocytes expressing 5-HT_{3A} or 5-HT_{3AB} receptors were exposed to n-butanol and dopamine, and effects on current were measured using the two-electrode voltage clamp technique.	n-Butanol enhanced the currents induced by low concentrations of 5-HT (~EC_{10}) and caused a slight decrease in the EC_{50} for 5-HT. In cells expressing HT_{3A}, the potentiation was much higher than in cells expressing the heteromeric 5-HT_{3AB} receptor.
Rusch et al., 2007	*X. laevis* oocytes expressing 5-HT_{3A} or 5-HT_{3AB} receptors	5–10 Oocytes/ test	21.6 mM	Cultured oocytes expressing serotonin 5-HT_{3A} or 5-HT_{3AB} receptors were exposed to n-butanol and dopamine, and effects on current were measured using the two-electrode voltage clamp technique.	n-Butanol strongly potentiated the peak currents elicited by dopamine in a dose-dependent fashion in oocytes expressing the 5-HT_{3A} receptor, and modestly potentiated the currents in those expressing the 5-HT_{3AB}. Co-exposure to n-butanol and octanol did not modify the potentiation compared with n-butanol alone.

Table C-3. Study details for mechanistic data and other studies in support of the mode of action for neurological effects

Reference	Test system	Number of samples/ group	Dose or concentration range	Study protocol	Result
Other mechanistic studies of neurological effects					
Hiller et al., 1984	Isolated rat brain membrane	Experiments conducted in triplicate	0.5%	Effect of n-butanol on binding opioid binding to kappa site tested by blocking mu and delta sites with appropriate ligands. Kinetic studies were made to assess possible mechanism of selective inhibition of delta sites.	n-Butanol did not inhibit kappa opioid binding sites, but selectively inhibited binding to the delta sites. Kinetic studies indicated that the inhibition is a result of a decrease in affinity of the binding site (increased dissociation rate) for the ligand.
Edelfors and Ravn-Jonsen, 1990	Rat brain synaptosomal membranes	Experiments conducted in triplicate	12.5, 25, and 50% of saturation (solubility reported to be 912 mmol/L)	Membranes were bathed in n-butanol and the membrane Ca2+/Mg2+ ATPase activity was measured spectrophoto-metrically. Membrane fluidity was measured as incorporation of fluorescent 1,6-diphenyl-1,3,5-hexatriene.	n-Butanol decreased the membrane ATPase activity in a concentration-dependent. Similarly, membrane fluidity was increased with increasing n-butanol concentration.
Bhattacharji et al., 2006; Harris et al., 2003; Shahidullah et al., 2003	*X. laevis* oocytes expressing wild-type and selectively mutated Shaw2 voltage-gated K^+ channels from *Drosophila melanogaster*	3–5 Oocytes/test	1–100 mM	Cultured oocytes expressing wild-type and mutant (generated by S5 alanine-scanning mutagenesis) Shaw2 K^+ channels were exposed to n-butanol, and the effect on current was measured using the two-electrode voltage clamp, whole-cell patch-clamp, or fast-concentration clamp technique.	n-Butanol inhibited the wild-type K+ channels, and several of the mutations modulated the inhibition associated with n-butanol. Mutation at a key site (P410A) in the S6 segment of the channel changed the n-butanol response from inhibition into potentiation. Studies were designed to explore molecular features of the binding site on the channel.

Glu = glutamate; nACh = nicotinic acetylcholine

Neurodevelopmental Effects

Kotter and colleagues (Kotter et al., 2000; Kotter and Klein, 1999) conducted a series of studies comparing the effects of ethanol and butanols on the proliferation of neonatal rat brain astroglial cells. In experiments on astrocyte cell proliferation rates, the effects of alcohols on proliferation were assessed by measuring [^{3}H]-thymidine incorporation after treatment of the cell cultures with alcohol and a mitogenic agent. Using fetal calf serum as the mitogen, Kotter and Klein (1999) treated astrocyte cells with n-butanol at concentrations of 0.1, 0.3, or 1.0%. Compared with cells treated with fetal calf serum alone, cell proliferation was inhibited by ~40 and 70%, at 0.1 and 0.3% n-butanol (respectively); proliferation was completely inhibited at 1% n-butanol. Similar results were observed using platelet-derived growth factor and endothelin 1 (Kotter and Klein, 1999).

Kotter et al. (2000) also measured astrocyte cell proliferation, but used phorbol ester as the mitogen. At concentrations of 0.1 and 0.3%, n-butanol inhibited proliferation of astroglial cells by ~50 and nearly 100% (based on visual inspection of data presented graphically), respectively, compared with cells treated with phorbol ester alone. The potency of inhibition of n-butanol was much stronger than that of ethanol; at 0.3% ethanol, cell proliferation was inhibited by only ~40%, compared with nearly 100% inhibition at the same concentration of n-butanol.

In two sets of experiments on the activation of astroglial phospholipase D (PLD), phospholipids in the cells were labeled by incubating the cells with [^{3}H]-glycerol for 24 hours prior to treatment with a mitogen and alcohol (Kotter et al., 2000; Kotter and Klein, 1999). The cultures were exposed to ethanol or butanols (0.1–1.0%) for 5 minutes prior to isolation of phospholipids and quantification of phosphatidic acide (PA) and phosphatidylcholine. When fetal calf serum was used as the mitogen (Kotter and Klein, 1999), treatment with n-butanol statistically significantly increased the formation of phosphatidylbutanol and decreased the formation of PA (~30–40% at 0.3% n-butanol based on visual inspection of data presented graphically). As with the effect on cell proliferation, n-butanol exhibited a stronger effect on PA formation than ethanol at the same concentration (~15% decrease in PA formation at 0.3% ethanol). Similar results were observed when phorbol ester was used as the mitogen (Kotter et al., 2000).

Kotter et al. (2000) also measured protein kinase C (PKC) activity after alcohol exposure; rat brain PKC was incubated with lipid micelles, phorbol ester, phosphatidylserine, and alcohol for 5 minutes, followed by the addition of [^{32}P]-ATP. PKC activity was statistically significantly reduced by both ethanol and n-butanol at a concentration of 0.3% (average of nine experiments showed ~95 and 85%, respectively, of activity in the absence of the alcohols).

These studies demonstrate that, like ethanol, n-butanol inhibits the proliferation of astroglial cells, probably by disrupting the PLD signaling pathway by formation of phosphatidyl-

butanols and concomitant reduction in PA formation. In all of the experiments reported, n-butanol exerted a stronger inhibitory effect than ethanol at the same concentration.

Liver Effects

Carlson (1994a, b) showed that n-butanol can esterify fatty acids in vivo (in rats) and in vitro (in the homogenized liver, lung, and pancreas of rats and rabbits). In the in vivo experiment, n-butanol was administered via i.p. injection (1.0 mL/kg or 810 mg/kg) to male Sprague-Dawley rats, and the animals were sacrificed for analysis of butyl palmitate, butyl stearate, and butyl oleate (butyl esters of fatty acids) in the liver 1 or 6 hours after dosing. Butyl palmitate and butyl stearate were detected in the livers of all 12 rats sacrificed after 1 hour, while butyl oleate was detected in only 5 out of 12 rats. Of the four rats sacrificed after 6 hours, butyl palmitate was detected in all rats, butyl stearate was detected in three rats, and butyl oleate was not detected in any rats. In the in vitro study, homogenized liver, lung, and pancreas from rats and rabbits were incubated with [^{14}C]-oleic acid (0.4 mM) and 0.2 M n-butanol for 45 minutes. Esterified oleic acid was isolated from the mixture and radioactivity in the isolate was measured. In rat liver, lung, and pancreas, the esterified oleic acid content was 271.8, 58.3, and 2,170 nmol/g tissue/hour, respectively. Lower levels were observed in rabbit liver, lung, and pancreas: 45.8, 33.5, and 487 nmol esterified [^{14}C]-oleic acid/g tissue/hour, respectively. These studies demonstrate that n-butanol, like ethanol, can esterify fatty acids.

McKarns et al. (1997) observed a correlation between the octanol:water partition coefficient, a measure of hydrophobicity, and release of LDH from rat liver epithelial cells treated in vitro with short-chain aliphatic alcohols. Cultures of WB rat hepatic epithelial cells were incubated with one of several alcohols (including n-butanol, 99.5% pure) for 1-hour durations at various concentrations. The concentration of LDH in the medium was assessed at the conclusion of exposure as a measure hepatotoxicity. n-Butanol was tested at concentrations between 0.05 and 0.2 M to establish a concentration-response curve for the purpose of estimating the LDH_{50} (concentration eliciting a 50% increase in LDH over control values) and EC_{50} (concentration eliciting 50% of maximum LDH release). LDH_{50} and EC_{50} were plotted against previously reported partition coefficients. The LDH_{50} and EC_{50} for release of LDH by n-butanol were both 0.16 M. The authors observed a strong positive correlation between release of LDH and octanol:water partitioning ($r = 0.993$) and derived quantitative structure-activity relationship (QSAR) equations for both LDH_{50} and EC_{50} that were nearly identical. The study authors postulated that the observed relationship implies that the alcohols' ability to disrupt membrane integrity is nonspecific, as it is not affected by molecular shape.

Deters et al. (1998a) demonstrated that, unlike ethanol, metabolism of n-butanol by ADH was not a necessary step in the hepatotoxic action of this compound. The study authors used 4-MP to inhibit ADH in isolated perfused rat livers (from male Wistar rats) exposed to various alcohols at 130.2 mmol/L. Liver damage was assessed by measuring leakage of GPT, LDH, and

GLDH into the perfusate and by measuring oxygen consumption, bile secretion, perfusion flow, and concentrations of ATP and GSH in the liver. Exposure to n-butanol alone resulted in a statistically significant change from control for all of the above parameters with the exception of GSH content of the liver. Exposure of the isolated livers to ethanol in the presence of 4-MP resulted in little or no evidence of liver injury; bile secretion was diminished, but other parameters were attenuated by 4-MP. In contrast, there were no differences between the effects observed in livers treated with n-butanol with or without 4-MP in the perfusate. This study demonstrates that the hepatotoxicity of n-butanol may not be related to metabolism by ADH.

Deters et al. (1998b) examined whether glycine, which had previously been shown to reduce hypoxia-related effects on the liver, would mitigate the hepatotoxic effects of n-butanol and several other liver toxicants. Using the isolated perfused liver system described earlier, and the same measures of hepatotoxicity, the study authors tested n-butanol with and without glycine. Exposure of the isolated livers to n-butanol resulted in statistically significantly increased release of GPT and LDH into the perfusate, decreased bile flow, decreased oxygen consumption and hepatic ATP content, decreased GSH in the liver, and increased levels of MDA in the liver. Deters et al. (1998b) observed that inclusion of glycine reduced the release of GPT and LDH into the perfusate; levels with glycine were similar to those observed in the control systems. In addition, when glycine was included, the oxygen consumption in the liver was increased compared with the n-butanol treatment without glycine; oxygen consumption in the livers treated with both n-butanol and glycine was similar to that of controls. Finally, glycine modulated the effect of n-butanol on GSH and MDA content in the liver; levels of both were similar to controls in the livers treated with n-butanol in the presence of glycine. Glycine did not affect the inhibition of bile flow induced by n-butanol.

Strubelt et al. (1999) assessed evidence of injury to perfused livers treated with 23 aliphatic alcohols including n-butanol. Liver injury was assessed by measuring release of GPT, LDH, and GLDH into the perfusate; oxygen consumption, bile flow, and perfusion flow; ATP, GSH, oxidized glutathione (GSSG), and MDA in the liver; and lactate and pyruvate concentrations in the perfusate. The alcohol exposures all used a concentration of 65.1 mmol/L added to the perfusate for 120 minutes. Exposure of perfused livers to n-butanol resulted in statistically significantly increased GPT and LDH (more than eightfold higher than controls for each) in the perfusate. The study authors reported that the potency of effects on LDH, GPT, and GLDH was strongly correlated with carbon chain length among straight-chain aliphatic alcohols ($r = 0.82–0.87$). In addition, n-butanol exposure resulted in decreased bile flow and perfusion flow (2 and 57% of control values, respectively), and an increase in the lactate/pyruvate ratio (increased lactate and decreased pyruvate). Treatment with n-butanol did not result in statistically significant changes in ATP, GSH, GSSG, or MDA content of the livers.

Other Mechanistic Studies

Krill et al. (1993) examined the effects of n-butanol, n-propanol, and isopropanol on thermotropic behavior of the stratum corneum of hairless mice and a model multilamellar vesicle system. The study was designed to examine the mechanisms for alcohol-related enhancement of lipophilic solute permeation across the skin. The model vesicle system was prepared from the phospholipids, distearoylphosphatidylcholine and distearoylphosphatidic acid. Stratum corneum sheets were removed from the abdomen of male hairless mice (strain SKH-HR-1). Fourier transform infrared spectroscopy was used to measure effects of the perdeuterated alcohols on stratum corneum lipid alkyl chain packing, mobility, and conformational order. Exposure of hairless mouse stratum corneum to 3% n-butanol resulted in increased lipid chain freedom of motion above 45°C and decreased the alkyl chain freedom of motion below 45°C, but did not alter the stratum corneum lipid interchain interactions or gel-gel phase transition. The study authors concluded that their experiments were consistent with the hypothesis that alcohols disrupt the polar head plane and increase the interfacial area of lipids, which enhances penetration of some solutes across the stratum corneum.

Kowalczyk et al. (1996) exposed two-cell preimplantation mouse embryos in culture to 0, 0.05, 0.1, 0.2, or 1.0% (w/v) n-butanol for 24 hours and followed the development of the embryos after 5 days. The number of embryos reaching blastocyst stage by day 5 was statistically significantly reduced at all concentrations of n-butanol. The reductions, which ranged from ~2 to 35% of control values, were not dose-dependent; the maximum reduction occurred at the lowest concentration. This result was the opposite of that observed with ethanol, which accelerates embryogenesis (increased number of blastocytes). In a separate experiment, 8-cell mouse morulae were pretreated with fluo-3-acetoxymethyl ester (a fluorescent indicator for intracellular calcium) and then exposed to 0.1 or 1.0% n-butanol. Fluorescence intensity was measured before and immediately after exposure and used to calculate calcium concentration. n-Butanol exposure statistically significantly increased the intracellular calcium concentration of the morulae at the high concentration but not at the low concentration (~sixfold increase at 1%). The study authors concluded that the increased release of calcium was a result of substantial disruption of membrane integrity and was a possible cause of the embryotoxicity observed in the first experiment.

Gastaldi et al. (1991) exposed small intestinal microvillous vesicles obtained from adult Wistar rats to butanol in vitro to assess the effects on vesicular morphology. The study did not specify whether n-butanol or t-butanol was used. The vesicles were incubated for 30 minutes with butanol at a concentration of 3% (v/v). After exposure, the vesicles were fixed for morphometric analysis (parameters were diameter of the area-equivalent circle, minimum to maximum diameter ratio [shape factor], and vesicular volume) by electron microscopy. A statistically significant increase in mean vesicular volume was observed with butanol exposure, and the study authors attributed this change to the fluidizing effect of the alcohol.

Gordon et al. (1995) compared the effects of several n-alcohols (methanol, ethanol, n-butanol, and 1-propanol) on isolated cannulated rat intracerebral arterioles (ex vivo). Concentrations of 1–100 mM of the n-alcohols were tested, and change in arteriolar diameter was measured. n-Butanol exposure resulted in dose-related increases in vessel diameter (vasodilation) ranging from ~15% (at 1 mM) to ~50% (at 100 mM) increase over the basal diameter.

Arsov et al. (2005) exposed erythrocyte ghosts prepared from bovine blood to n-butanol in an effort to determine the mechanism of n-butanol-induced inhibition of erythrocyte acetylcholinesterase (AChE) at high concentrations. AChE activity was measured with and without different concentrations of n-butanol (0.07, 0.15, 0.22, and 0.37 M) and at different temperatures. At 0.07 M and a temperature of ≥310°K, there was no inhibition of AChE; at higher concentrations, n-butanol inhibited AChE activity in the temperature range tested (up to 320°K). In experiments in which the n-butanol was removed by dialysis after the exposure, reversibility of AChE inhibition was shown at 0.22 M n-butanol, but at 0.37 M, AChE inhibition was still evident after the alcohol was removed. The study authors used the experimental results, along with published information, in kinetics studies to estimate the number of molecules that bind to the AChE enzyme. They concluded that, since the activity equation that best fit the data was the inverse of a second order polynomial, two n-butanol molecules likely bind to AChE.

Ding and Badwey (1994) examined the effects of n-butanol on four uncharacterized protein kinases that are activated by the chemoattractant, fMet-Leu-Phe. When exposed to this chemoattractant, neutrophils exhibit shape changes, chemotaxis, degranulation, and release of superoxide. The study authors measured the release of superoxide from cultured guinea pig peritoneal neutrophils treated with 20–70 mM n-butanol and fMet-Leu-Phe (1 µm). n-Butanol exposure resulted in a concentration-related inhibition of superoxide release (from about 30% inhibition at 20 mM to about 90% inhibition at 70 mM compared with cells not exposed to n-butanol). Addition of 4 β-phorbol 12-myristate 13-acetate (PMA), a PKC activator, to cells treated with 55 mM n-butanol restimulated the release of superoxide, counteracting the inhibitory effects of n-butanol. Without PMA, n-butanol at 55 mM resulted in 74% inhibition of superoxide release, while the same concentration with PMA resulted in only 27% inhibition. While this study was primarily aimed at elucidating the mechanism of action of the novel protein kinases, it does suggest that n-butanol exposure may interfere with immune cell signaling. The potential impact on immune function, however, is uncertain.

APPENDIX D. n-BUTANOL PBPK MODEL

D.1. Model Code

```
PROGRAM BUTYL.CSL -- PBPK Model for Butyl Acetate and Its Butyl-Series Metabolites
! Modified version of BANew8I.csl
! Output units for this model are umoles and mL (or grams)

! Modified from BANew6.CSL -- November, 2001
! Last Modified:  Oct. 6, 1998
! Modified by:  Hugh A. Barton

! This version runs in kg as modified by Justin Teeguarden 6.9.99
! Validated 6.9.99 by Justin Teeguarden

! Modified 7.11.99 by Justin Teeguarden (of BANEW2) to include metabolism of
!   EtAcin other perfused tissues.  AUC of EtAc under Deisiv2 for this version
!   matches BANEW2.CSL with Metabolism in Other Perfused Tissues=0.

! Modified 6.20.00 by JGT changing the CEx1, CEX2, CEX3, CEX4 to use Free blood
!   concentration instead of lung concentration.

! Revised November 2001, Justin Teeguarden.  Removed URT for butyl acetate.
!   Added closed chamber for BuOH and FA (fractional uptake term) for Butyl
!   Acetate.  These changes were made to model the butyl acetate closed chamber
!   data from Batelle, Poet and Corely 2001.  Mass balance OK.  Without the URT,
!   the inhaled amount for the GrothInh2 simulation using *8.csl is the same as
!   *5.csl (the minor difference is due to an effective tstop which is a bit
!   different.)  This served as the validation for the removal of the URT.

! Alveolar Ventilation Rate Tables 1-7 QA'd 12.19.01 JGT

! NOTE:  All units are expressed as mL(g), hr, or umol in the derivative section

! This version has inhalation, IV and oral dosing.
! It uses a table command for the inhalation dose using the values from the
!   study in the Groth paper.

! Parameters followed by 1,2,3,4 stand for:
!   Submodel 1:  n-Butyl acetate
!   Submodel 2:  n-butanol
!   Submodel 3:  n-Butyraldehyde
!   Submodel 4:  n-Butyric acid

!*******************************************************************************
!Revised and imported into acslXtreme v 2.5.0.6 as "BUTYLAC.csl" on 04/23/2010 (G Diamond/SRC)
!Revisions are marked with "!" and "<GD>
!  Handling of exposure/dose parameters standardized to: inputs ppm/mg/kg --> convert to umol/L or umol/kg -->
! inputs ppm/mg/kg --> convert to umol/L or umol/kg --> adjust for dose duration (e.g., < 1hr)
! --> apply timing pulse functions (i.e., on/off) --> Integration functions
!  CINT revised from function of CintC and TChng to a CONSTANT
!  TChng revised to route specific dose averaging time CONSTANTs (e.g. IVDAT, ORDAT)
!*******************************************************************************
!  Modified on 02/25/2011 by AFS to create “clean” version:
!  Legacy code, and commented-out lines of code have been removed.  Some formatting changes
!  made to ensure proper word-wrap in documents.  Code was tested to ensure it properly ran
```

```
!*******************************************************************************

INITIAL
                                                !<GD>
              INTEGER   Rats, QPTable, Tube, INHTABLE  !<GD>
  CONSTANT         BW = 0.30     ! Body weight (kg)
  CONSTANT        QPC = 14000.0  ! Alveolar ventilation (mL/hr/kg**0.75)

! Blood Flows (fraction of cardiac output)
  CONSTANT        QCC = 14000.0  ! Cardiac output (mL/hr/kg**0.75)
  CONSTANT       QFatC = 0.07     ! Fat
  CONSTANT       QLivC = 0.175    ! Liver

! Tissue Volumes (fraction of body weight)
  CONSTANT        VABC = 0.022    ! Arterial blood
  CONSTANT       VFatC = 0.07     ! Fat
  CONSTANT       VLivC = 0.037    ! Liver
  CONSTANT      VLungC = 0.005    ! Lung tissue
  CONSTANT       VOthC = 0.751    ! Other perfused tissues
  CONSTANT        VVBC = 0.045    ! Venous blood

! Partition Coefficients
!  Butyl Acetate
    CONSTANT       PB1 = 89.4     ! Blood:air
    CONSTANT     PFat1 = 17.0     ! Fat:blood
    CONSTANT     PLiv1 = 3.14     ! Liver:blood
    CONSTANT    PLung1 = 1.76     ! Lung:blood
    CONSTANT     POth1 = 1.76     ! Other perfused tissues:blood

!  n-butanol
    CONSTANT       PB2 = 1160.0   ! Blood:air
    CONSTANT     PLiv2 = 1.08     ! Liver:blood
    CONSTANT    PLung2 = 0.78     ! Lung:blood
    CONSTANT     POth2 = 0.78     ! Other perfused tissues:blood

!  n-Butyraldehyde
    CONSTANT       PB3 = 1160.0   ! Blood:air
    CONSTANT     PLiv3 = 1.08     ! Liver:blood
    CONSTANT    PLung3 = 0.78     ! Lung:blood
    CONSTANT     POth3 = 0.78     ! Other perfused tissues:blood

!  Butyric Acid
    CONSTANT       PB4 = 1160.0   ! Blood:air
    CONSTANT     PLiv4 = 1.08     ! Liver:blood
    CONSTANT    PLung4 = 0.78     ! Lung:blood
    CONSTANT     POth4 = 0.78     ! Other perfused tissues:blood

! Metabolism
!  Butyl Acetate
    CONSTANT VMBloodC1 = 600000.0 ! Blood (umole/hr/kg**0.75)
    CONSTANT  KMBlood1 = 100.0    ! Blood (umole/mL)
    CONSTANT   VMLivC1 = 38700.0  ! Liver (umole/hr/kg**0.75)
    CONSTANT    KMLiv1 = 1.0      ! Liver (umole/mL)
    CONSTANT   VMOthC1 = 6.0e6    ! Other Perfused Tissues (umole/hr/kg**0.75)
    CONSTANT    KMOth1 = 100.0    ! Other Perfused Tissues (umole/mL)

!  n-butanol
```

```
   CONSTANT   VMLivC2 = 2170.0   ! Liver (umole/hr/kg**0.75) <GD>
   CONSTANT    KMLiv2 = 0.16      ! Liver (umole/mL) <GD>
   CONSTANT    kOthC2 = 4.0      ! First-order BuOH clearance (kg**0.25/hr) <GD>

!  n-Butyraldehyde
   CONSTANT   VMLivC3 = 17780.0  ! Liver (umole/hr/kg**0.75)
   CONSTANT    KMLiv3 = 0.1      ! Liver (umole/mL)

!  Butyric Acid
   CONSTANT   VMLivC4 = 1400.0   ! Liver (umole/hr/kg**0.75)
   CONSTANT    KMLiv4 = 0.1      ! Liver (umole/mL)
   CONSTANT   VMOthC4 = 3000.0   ! OPT (umole/hr/kg**0.75)
   CONSTANT    KMOth4 = 0.1      ! OPT (umole/mL)

! Filtration (blood-urine) from Venous Blood ((kg**0.25)/hr)
  CONSTANT     kFiltC1 = 7.401e-2 ! Butyl Acetate
  CONSTANT     kFiltC2 = 22.2     ! n-butanol
  CONSTANT     kFiltC4 = 7.41e-2  ! Butyric Acid

! Fractional Inhalation Absorption - Butyl Acetate, Butanol
  CONSTANT        FA1 = 1.0
  CONSTANT        FA2 = 0.5
  CONSTANT        FA3 = 1.0
  CONSTANT        FA4 = 1.0

! Oral Absorption
  CONSTANT        kAC = 0.0      ! Absorption rate (kg**0.25/hr)

! Initial Amounts in Arterial Blood (i.e., integration start value)
  CONSTANT      AAB10C = 0.0      ! BuAc (mg/kg)
  CONSTANT      AAB20C = 0.0      ! BuOH (mg/kg)
  CONSTANT      AAB30C = 0.0      ! BuCHO (mg/kg)
  CONSTANT      AAB40C = 0.0      ! BuCOOH (mg/kg)

! Molecular Weights <GD>
            CONSTANT                                    MW1 = 116.16                ! BuAc
            CONSTANT                                    MW2 = 74.12                 ! BuOH
            CONSTANT                                    MW3 = 72.11                 ! BuCHO
            CONSTANT                                    MW4 = 88.11                 ! BuCOOH

! Simulation Parameters
  CONSTANT       TStop = 0.5      ! Length of experiment (hr)
  CINTERVAL CINT = 1.                                   !Communication interval (hr)
            !CINT = CIntC <GD>

! Intravenous Dosing Parameters
  CONSTANT     IVDose1 = 0.0      ! BuAc (mg/kg)
  CONSTANT     IVDose2 = 0.0      ! BuOH (mg/kg)
  CONSTANT     IVDose3 = 0.0      ! BuCHO (mg/kg)
  CONSTANT     IVDose4 = 0.0      ! BuCOOH (mg/kg)

            IVDUM1= IVDose1 * 1000 * BW/MW1   !BuAc (umol)  <GD>
            IVDUM2= IVDose2 * 1000 * BW/MW2   !BuOH  (umol) <GD>
            IVDUM3= IVDose3 * 1000 * BW/MW3   !BuCHO (umol) <GD>
            IVDUM4= IVDose4 * 1000 * BW/MW4   !BuCOOH (umol <GD>

CONSTANT IVDAT=1.  !IV injection averaging time (hr; for infusion, IVDAT = 1.) <GD>
```

```
CONSTANT IVDON=0.  !IV start time (hr) <GD>
CONSTANT IVDOFF=0.   !IV stop time (for single injection, IVDOFF must = IVDAT) <GD>

! Oral Dosing Parameters
  CONSTANT      PDose1 = 0.0      ! BuAc (mg/kg)
  CONSTANT      PDose2 = 0.0      ! BuOH (mg/kg)
  CONSTANT      PDose3 = 0.0      ! BuCOO (mg/kg)
  CONSTANT      PDose4 = 0.0      ! BuCOOH (mg/kg)

            ORDUM1 = PDose1 * 1000 * BW/MW1   !BuAc (umol)   <GD>
            ORDUM2 = PDose2 * 1000 * BW/MW2   !BuOH (umol)              <GD>
            ORDUM3 = PDose3 * 1000 * BW/MW3   !BuCOO (umol)           <GD>
            ORDUM4 = PDose4 * 1000 * BW/MW4   !BuCOOH (umol) <GD>

            CONSTANT ORDON=0.           !Exposure start (hr) <GD>
            CONSTANT ORDOFF=0.          !Exposure stop (hr) <GD>
            CONSTANT ORDPER1=20000.!Exposure pulse period (e.g. 24-hr day) <GD>
            CONSTANT ORDWID1=20000.!Exposure pulse 1 width (e.g. hr/day)) <GD>
            CONSTANT ORDPER2=20000.!Exposure pulse period (e.g. 168-hr wk) <GD>
            CONSTANT ORDWID2=20000.!Exposure pulse 1 width (120 hr/wk) <GD>
            CONSTANT ORDAT=1.0          !Dosing averaging time for single oral dose (e.g. gavage) <GD>

! Inhalation Dosing Paramters
  CONSTANT     INHTABLE = 0  ! Switch to use inhlation exposures from INHTABLE (=1)

  CONSTANT       CInh1 = 0.0      ! BuAc (ppm)
  CONSTANT       CInh2 = 0.0      ! BuOH (ppm)
  CONSTANT       CInh3 = 0.0      ! BuCOO (ppm)
  CONSTANT       CInh4 = 0.0      ! BuCOOH (ppm)
  CONSTANT     QPTable = 0                              ! Set to .T. for using observed MV data <GD>

CIUM1= CInh1/24450  !BuAc (umol/ml) <GD>
CIUM2= CInh2/24450  !BuOH (umol/ml) <GD>
CIUM3= CInh3/24450  !BuCOO (umol/ml) <GD>
CIUM4= CInh4/24450  !BuCOOH (umol/ml) <GD>

CONSTANT CIOFFPPM1=0.  !BuAc conc.  when inhalation exposure is off (ppm) <GD>
CONSTANT CIOFFPPM2=0.  !BuOH conc. when inhalation exposure is off (ppm) <GD>
CONSTANT CIOFFPPM3=0.  !BuCOO conc. when inhalation exposure is off (ppm) <GD>
CONSTANT CIOFFPPM4=0.  !BuCOOH conc.  when inhalation exposure is off (ppm) <GD>

CIOFF1= CIOFFPPM1/24450   !BuAc conc.  when inhalation exposure is off (umol/ml) <GD>
CIOFF2= CIOFFPPM2/24450   !BuOH conc.  when inhalation exposure is off (umol/ml) <GD>
CIOFF3= CIOFFPPM3/24450   !BuCOO conc. when inhalation exposure is off (umol/ml) <GD>
CIOFF4= CIOFFPPM4/24450   !BuCOOH conc. when inhalation exposure is off (umol/ml) <GD>

CONSTANT INHON=0.                                  !Time inhalation exposure starts (hr) <GD>
CONSTANT INHOFF= 10.     !Time exposure stops (hr) <GD>
CONSTANT INHPER1=20000.  !Pulse period 1 for exposure (e.g., 24-hr day) <GD>
CONSTANT INHWID1=20000.  !Pulse width 1 (e.g. 6 hr/day) <GD>
CONSTANT INHPER2=20000.  !Pulse period 2 (e.g. 168-hr wk) <GD>
CONSTANT INHWID2=20000.  !Pulse width 2 (e.g.  120 hr/wk) <GD>

TABLE CINHTAB1,1,200/200*0.0,200*0.0/              !Call VentTableS2 from CINHTAB*.dat file <GD>
TABLE CINHTAB2,1,200/200*0.0,200*0.0/              !Call VentTableS2 from CINHTAB*.dat file <GD>
TABLE CINHTAB3,1,200/200*0.0,200*0.0/              !Call VentTableS2 from CINHTAB*.dat file <GD>
TABLE CINHTAB4,1,200/200*0.0,200*0.0/              !Call VentTableS2 from CINHTAB*.dat file <GD>
```

```
!Deleted Table values in CSL and replaced with m-files that fill tables <GD>



! Inhalation Dose for Closed Chamber
  CONSTANT    SCInPPM1 = 0.0      ! BuAc (ppm)
  CONSTANT    SCInPPM2 = 0.0      ! BuOH (ppm)
  CONSTANT    SCInPPM3 = 0.0      ! BuCHO (ppm)
  CONSTANT    SCInPPM4 = 0.0      ! BuCOOH (ppm)

              CICHUM1= SCInPPM1/24450  !BuAc (umol/ml) <GD>
              CICHUM2= SCInPPM2/24450  !BuOH (umol/ml) <GD>
              CICHUM3= SCInPPM3/24450  !BuCOO (umol/ml) <GD>
              CICHUM4= SCInPPM4/24450  !BuCOOH (umol/ml) <GD>

              ACh01 = 0.0  ;  ACh02 = 0.0  ;  ACh03 = 0.0  ;  ACh04 = 0.0 !<GD>
              ACh01 = VCh*CICHUM1 !BuAc (umol) <GD>
              ACh02 = VCh*CICHUM2          !BuOH (umol) <GD>
              ACh03 = VCh*CICHUM3          !BuCOO (umol) <GD>
              ACh04 = VCh*CICHUM4          !BuCOOH (umol) <GD>

  TABLE VentTable,1,200/200*0.0,200*0.0/!Call VentTable from *.dat file <GD>
              !Deleted Table values <GD>

! Closed Chamber Parameters
! If a Plethysmorgraph tube is used, the given volume of the chamber should be
!  used directly without subtraction of the volume of the rat (number of rats x BW).
!  Set Tube=.T.
  CONSTANT        ClOn = 0.0                  !Switch for closed chamber (=1), or open (=0)
  CONSTANT        VChC = 1.0e10   ! Volume of closed chamber (L)
  CONSTANT        Rats = 0                                  ! Number of rats in chamber
  CONSTANT        Tube = 0                                  !Switch to include Tube (=1)
  CONSTANT       LossT = 0.0      ! Time to switch to second chamber loss term

! Closed Chamber Parameters -- Loss Rates (/hr)
  CONSTANT     kLoss1R = 0.0      ! Rat body for n-Butyl acetate
  CONSTANT    kLoss1C1 = 0.0      ! Chamber for n-Butyl acetate
  CONSTANT    kLoss1C2 = 0.0      ! Chamber for n-Butyl acetate for 2nd period
  CONSTANT     kLoss2R = 0.0      ! Rat body for n-butanol
  CONSTANT    kLoss2C1 = 0.0      ! Chamber for n-butanol
  CONSTANT    kLoss2C2 = 0.0      ! Chamber for n-butanol for 2nd period
  CONSTANT     kLoss3R = 0.0      ! Rat body for n-Butyraldehyde
  CONSTANT      kLoss3 = 0.0      ! Chamber for n-Butyraldehyde
  CONSTANT     kLoss4R = 0.0      ! Rat body for n-Butyric acid
  CONSTANT      kLoss4 = 0.0      ! Chamber for n-Butyric acid

! Blood Flows (mL/hr)
     QOthC = 1.0 - QFatC - QLivC       ! Other perfused tissues (fraction)

! Tissue Volumes (mL)
       VAB = VABC * BW * 1000.0        ! Arterial blood volume
      VFat = VFatC * BW * 1000.0       ! Fat
      VLiv = VLivC * BW * 1000.0       ! Liver
     VLung = VLungC * BW * 1000.0      ! Lung
      VOth = VOthC * BW * 1000.0       ! Other perfused tissues
       VVB = VVBC * BW * 1000.0        ! Venous blood
    VBlood = VAB + VVB                 ! Total blood
```

```
! Metabolism -- Butyl Acetate (umoles/hr)
    VMAB1 = VMBloodC1 * VAB/VBlood * (BW**0.75)      ! Arterial metabolism BuAc
    VMVB1 = VMBloodC1 * VVB/VBlood * (BW**0.75)      ! Venous metabolism BuAc
   VMLiv1 = VMLivC1 * (BW**0.75)                     ! Liver metabolism BuAc
                VMOth1 = VMOthC1 * (BW**0.75)      ! Other Perfused Tissue Metabolism EtAc


! Metabolism -- n-butanol
   VMLiv2 = VMLivC2 * (BW**0.75)      ! Liver metabolism BuOH (umoles/hr)
    kOth2 = kOthC2 / (BW**0.25)       ! Other metabolism BuOH (/hr)

! Metabolism -- n-Butyraldehyde (umoles/hr)
   VMLiv3 = VMLivC3 * (BW**0.75)      ! Liver metabolism BuCHO

! Metabolism -- Butyric Acid (umoles/hr)
   VMLiv4 = VMLivC4 * (BW**0.75)      ! Liver metabolism BuCOOH
   VMOth4 = VMOthC4 * (BW**0.75)      ! OPT metabolism BuCOOH

! Filtration from Venous Blood (/hr)
   kFilt1 = kFiltC1 / (BW**0.25)      ! Kidney Filtration of BuAc
   kFilt2 = kFiltC2 / (BW**0.25)      ! Kidney Filtration of BuOH
   kFilt4 = kFiltC4 / (BW**0.25)      ! Kidney Filtration of BuCOOH

! Oral Absorption (/hr)
      kA = kAC / (BW**0.25)

! Initial Amounts in Arterial Blood (i.e. integration start value)
    AAB10 = ((AAB10C * 1000.0)/MW1) * BW     ! BuAc (umoles total)
    AAB20 = ((AAB20C * 1000.0)/MW2) * BW     ! BuOH (umoles total)
    AAB30 = ((AAB30C * 1000.0)/MW3) * BW     ! BuCHO (umoles total)
    AAB40 = ((AAB40C * 1000.0)/MW4) * BW     ! BuCOOH (umoles total)

! Initialize values
    ! CINT = CIntC
  DoseMod = 0.0
     kIV1 = 0.0 ;      kIV2 = 0.0 ;      kIV3 = 0.0 ;      kIV4 = 0.0
    Conc1 = 0.0 ;     Conc2 = 0.0 ;     Conc3 = 0.0 ;     Conc4 = 0.0
    Dose1 = 0.0 ;     Dose2 = 0.0 ;     Dose3 = 0.0 ;     Dose4 = 0.0
   XCInh1 = 0.0 ;    XCInh2 = 0.0 ;    XCInh3 = 0.0 ;    XCInh4 = 0.0
XSCInPPM1 = 0.0 ; XSCInPPM2 = 0.0 ; XSCInPPM3 = 0.0 ; XSCInPPM4 = 0.0
  XPDose1 = 0.0 ;   XPDose2 = 0.0 ;   XPDose3 = 0.0 ;   XPDose4 = 0.0
  XAUCTB1 = 0.0 ;   XAUCTB2 = 0.0 ;   XAUCTB3 = 0.0 ;   XAUCTB4 = 0.0
   CVLiv1 = 0.0 ;    CVLiv2 = 0.0 ;    CVLiv3 = 0.0 ;    CVLiv4 = 0.0

    CCh1 = 0.0 ;  CCh2 = 0.0 ;  CCh3 = 0.0 ;  CCh4 = 0.0

! Closed Chamber Parameters
 IF (Tube .EQ. 0) THEN                          !<GD>
     VCh = VChC*1000.0 - Rats*BW*1000.0        ! Volume adjusted to mL
 ELSE
     VCh = VChC*1000.0
 ENDIF

END     ! End of Initial

DYNAMIC
 ALGORITHM IALG = 2   ! Gear algorithm
```

```
DERIVATIVE
   Minutes = T * 60.0
   Seconds = Minutes * 60.0

PROCEDURAL  !<GD>
  IF (QPTable .EQ. 0) THEN
      QP = QPC*(BW**0.75)
      QC = QCC*(BW**0.75)
                ELSE
      QP = VentTable(Minutes)
      QC = QP
  ENDIF
  QFat = QFatC * QC     ! Fat
  QLiv = QLivC * QC     ! Liver
  QOth = QOthC * QC     ! Other perfused tissues
END

!IV Dosing Simulation

            IV1=IVDUM1/IVDAT  !BuAc (umol/hr) <GD>
            IV2=IVDUM2/IVDAT  !BuOH (umol/hr) <GD>
            IV3=IVDUM3/IVDAT  !BuCOO (umol/hr) <GD>
            IV4=IVDUM4/IVDAT  !BuCOOH (umol/hr) <GD>

            kIV1= RSW(T.LE.IVDOFF,IV1,0.)  !BuAC (umol/hr on/off) <GD>
            kIV2= RSW(T.LE.IVDOFF,IV2,0.)  !BuOH (umol/hr on/off) <GD>
            kIV3= RSW(T.LE.IVDOFF,IV3,0.)  !BuCOO(umol/hr on/off) <GD>
            kIV4= RSW(T.LE.IVDOFF,IV4,0.)  !BuCOOH (umol/hr on/off) <GD>

!Oral Dosing Simulation <GD>
            IF ((PDose1+PDose2+PDose3+PDose4) .GT. 0.)THEN
                        ORAL= PULSE(ORDON,ORDPER1,ORDWID1)*PULSE(ORDON,ORDPER2,ORDWID2)
            ELSE
                        ORAL=0.
            END IF

            ORAL1 = ORAL *ORDUM1/ORDAT        !BuAc (umol/hr)
            ORAL2=  ORAL *ORDUM2 /ORDAT       !BuOH(umol/hr)
            ORAL3 = ORAL *ORDUM3 /ORDAT       !BuCOO (umol/hr)
            ORAL4 = ORAL *ORDUM4/ORDAT         !BuCOOH (umol/hr)

            Dose1= RSW(T.LE.ORDOFF,ORAL1,0.)  !BuAc(umol/hr on/off)
            Dose2= RSW(T.LE.ORDOFF,ORAL2,0.)  !BuOH (umol/h on/off)
            Dose3= RSW(T.LE.ORDOFF,ORAL3,0.)  !BuCOO (umol/hr on/off)
            Dose4= RSW(T.LE.ORDOFF,ORAL4,0.)  !BuCOOH (umol/hr on/off)

!Inhalation Dosing Simulation <GD>

            IF ((CInh1+CInh2+CInh+CInh4) .GT. 0.)THEN
                        CION= PULSE(INHON,INHPER1,INHWID1)*PULSE(INHON,INHPER2,INHWID2)
            ELSE
                        CION=0.
            END IF

            CION1 = CION *      CIUM1  !BuAc exposure (umol/ml)
            CION2 = CION *      CIUM2  !BuOH exposure (umol/ml)
```

```
            CION3 = CION *      CIUM3  !BuCOO exposure (umol/ml)
            CION4 = CION *      CIUM4  !BuCOOH exposure (umol/ml)

            Conc11 = RSW(T.LE.AIROFF,CION1,CIOFF)
                        !BuAc conc. in inhaled air (umol/L on/off)
            Conc22 = RSW(T.LE.AIROFF,CION2,CIOFF)
                        !BuOH conc. in inhaled air (umol/L on/off)
            Conc33 = RSW(T.LE.AIROFF,CION3,CIOFF)
                        !BuCOO conc. in inhaled air (umol/L on/off)
            Conc44 = RSW(T.LE.AIROFF,CION4,CIOFF)
                        !BuCOOH conc. in inhaled air (umol/L on/off

 IF (INHTABLE .EQ. 1) THEN
            Conc1 = CINHTAB1(minutes)/24450.0
            Conc2 = CINHTAB2(minutes)/24450.0
            Conc3 = CINHTAB3(minutes)/24450.0
            Conc4 = CINHTAB4(minutes)/24450.0
ELSE
            Conc1 = Conc11  !BuAc conc. in inhaled air (umol/L on/off)
            Conc2 = Conc22  !BuOH conc. in inhaled air (umol/L on/off)
            Conc3 = Conc33  !BuCOO conc. in inhaled air (umol/L on/off)
            Conc4 = Conc44  !BuCOOH conc. in inhaled air (umol/L on/off
ENDIF

!Chamber Loss simulation
            kLoss1= RSW(T.LE.LossT,kLoss1C1,kLoss1C2)  !BuAC (umol/hr on/off) <GD>
            kLoss2= RSW(T.LE.LossT,kLoss2C1,kLoss2C2)  !BuAC (umol/hr on/off) <GD>

!*************************   Butyl Acetate   *************************
! Arterial Blood (umoles)
    RAAB1 = (QC * (CVLung1 - CAB1)) - RMetAB1
     AAB1 = INTEG(RAAB1, AAB10)
     CAB1 = AAB1 / VAB
                                    AUCAB1 = INTEG(CAB1, 0.0)

! Blood Metabolism (umoles)
  RMetAB1 = (VMAB1 * CAB1) / (KMBlood1 + CAB1)
   MetAB1 = INTEG(RMetAB1, 0.0)

! Fat (umole)
   RAFat1 = QFat * (CAB1 - CVFat1)
    AFat1 = INTEG(RAFat1, 0.0)
    CFat1 = AFat1 / VFat
   CVFat1 = CFat1 / PFat1

! Liver (umoles)
   RALiv1 = (QLiv * (CAB1 - CVLiv1)) - RMetLiv1 + RMR1
    ALiv1 = INTEG(RALiv1, 0.0)
    CLiv1 = ALiv1 / VLiv
   CVLiv1 = CLiv1 / PLiv1
  AUCLiv1 = INTEG(CLiv1, 0.0)

! Liver Metabolism (umoles)
 RMetLiv1 = (VMLiv1 * CVLiv1) / (KMLiv1 + CVLiv1)
  MetLiv1 = INTEG(RMetLiv1, 0.0)

! Amount remaining to be absorbed into liver from GI (umoles)
```

```
     RMR1 = kA * MR1
      MR1 = Dose1 - INTEG(RMR1, 0.0)
! Chamber concentration (umoles/mL)
    RACh1 = (Rats * QP * CEx1) - (FA1 * Rats * QP * CCh1) - (kLoss1 * ACh1)&
        - (kLoss1R * Rats * ACh1)
                ACh1 = INTEG(RACh1, ACh01)
     CCh1 = ((ACh1 / VCh) * ClOn) + (Conc1 * (1.0 - ClOn))
   CCPPM1 = CCh1 * 24450.0
   CLoss1 = INTEG(((kLoss1 * ACh1) + (kLoss1R * Rats * ACh1)), 0.0)

            IF (SCINPPM1 .GT. 0.) THEN
                    CCPPM1PCT=100.*CCPPM1/SCINPPM1  !BuAc conc. as % of intitial <GD>
            ELSE
                    CCPPM1PCT = 0.
            END IF

! Lungs
!  Amount in Lungs (umoles)
  RALung1 = (QP * ((FA1 * CCh1) - CEx1)) + (QC * (CVB1 - CVLung1))
   ALung1 = INTEG(RALung1, 0.0)
   CLung1 = ALung1 / VLung
  CVLung1 = CLung1 / PLung1

!  Amount Inhaled (umoles)
  RInhal1 = FA1 * QP * CCh1
  AInhal1 = INTEG(RInhal1, 0.0)
 AInhal1C = AInhal1 * Rats

!  Amount Exhaled (umoles)
     CEx1 = CvLung1 / PB1
    RAEx1 = QP * CEx1
     AEx1 = INTEG(RAEx1, 0.0)
    AEx1C = AEx1 * Rats

! Other Perfused Tissue Modified to Include Metabolism (umoles)
   RAOth1 = (QOth * (CAB1 - CVOth1)) - RMetOth1
    AOth1 = INTEG(RAOth1, 0.0)
    COth1 = AOth1 / VOth
   CVOth1 = COth1 / POth1
  AUCOth1 = INTEG(COth1, 0.0)

! Other Perfused Tissue Metabolism (umoles)
 RMetOth1 = (VMOth1 * CVOth1) / (KMOth1 + CVOth1)
  MetOth1 = INTEG(RMetOth1, 0.0)

! Venous Blood (umoles)
    RAVB1 = (QFat*CVFat1) + (QLiv*CVLiv1) + (QOth*CVOth1) + kIV1 &
        - (QC*CVB1) - RMetVB1 - RAFilt1
     AVB1 = INTEG(RAVB1, 0.0)
     CVB1 = AVB1 / VVB
    AUCB1 = INTEG(CVB1, 0.0)

!  Metabolism
  RMetVB1 = (VMVB1 * CVB1) / (KMBlood1 + CVB1)
   MetVB1 = INTEG(RMetVB1, 0.0)

!  Filtration
```

```
  RAFilt1 = kFilt1 * AVB1
   AFilt1 = INTEG(RAFilt1, 0.0)

! Average Blood (umoles)
     CTB1 = (AAB1 + AVB1) / (VAB + VVB)
   AUCTB1 = INTEG(CTB1, 0.0)

!***************************   n-butanol   ***************************
! Arterial Blood (umoles)
    RAAB2 = (QC * (CVLung2 - CAB2)) + RMetAB1
     AAB2 = INTEG(RAAB2, AAB20)
     CAB2 = AAB2 / VAB
                    AUCAB2 = INTEG(CAB2, 0.0)
                    IF (T>0.) THEN                    !<GD>
                            AUCAB2_24=(AUCAB2/T)*24.  !AUC mM*24 hr <GD>
                    ELSE                              !<GD>
                            AUCAB2_24=0.      !<GD>
                    END IF

! Liver (umoles)
   RALiv2 = (QLiv * (CAB2 - CVLiv2)) + RMetLiv1 + RMR2 - RMetLiv2
    ALiv2 = INTEG(RALiv2, 0.0)
    CLiv2 = ALiv2 / VLiv
   CVLiv2 = CLiv2 / PLiv2
  AUCLiv2 = INTEG(CLiv2, 0.0)

! Liver Metabolism (umoles)
 RMetLiv2 = (VMLiv2 * CVLiv2) / (KMLiv2 + CVLiv2)
  MetLiv2 = INTEG(RMetLiv2, 0.0)

! Amount remaining to be absorbed into liver from GI (umoles)
     RMR2 = kA * MR2
      MR2 = Dose2 - INTEG(RMR2, 0.0)

! Chamber concentration (umoles/mL)
    RACh2 = (Rats * QP * CEx2) + (kLoss1 * ACh1) - (FA2 * Rats * QP * CCh2) &
        - (kLoss2 * ACh2) - (kLoss2R * Rats * ACh2)
     ACh2 = INTEG(RACh2, ACh02)
     CCh2 = ((ACh2 / VCh) * ClOn) + (Conc2 * (1.0 - ClOn))
   CCPPM2 = CCh2 * 24450.0
   CLoss2 = INTEG(((kLoss2 * ACh2) + (kLoss2R * Rats * ACh2)), 0.0)

            IF (SCINPPM2 .GT. 0.) THEN
                    CCPPM2PCT=100.*CCPPM2/SCINPPM2  !BuOH conc. as % of intitial <GD>
            ELSE
                    CCPPM2PCT = 0.
            END IF

! Lungs
!  Amount in Lungs (umoles)
  RALung2 = (QP * ((FA2 * CCh2) - CEx2)) + (QC * (CVB2 - CVLung2))
   ALung2 = INTEG(RALung2, 0.0)
   CLung2 = ALung2 / VLung
  CVLung2 = CLung2 / PLung2

!  Amount Inhaled
  RInhal2 = FA2 * QP * CCh2
```

```
  AInhal2 = INTEG(RInhal2, 0.0)
 AInhal2C = AInhal2 * Rats

!  Amount Exhaled
     CEx2 = CvLung2 / PB2
    RAEx2 = QP * CEx2
     AEx2 = INTEG(RAEx2, 0.0)
                AEx2C = AEx2 * Rats

! Other Perfused Tissues (umoles)
   RAOth2 = ((QOth + QFat) * (CAB2 - CVOth2)) + RMetOth1 - RAMOth2
    AOth2 = INTEG(RAOth2, 0.0)
    COth2 = AOth2 / (VOth + VFat)
   CVOth2 = COth2 / POth2

! Metabolism in Other Perfused Tissues (umoles)
  RAMOth2 = kOth2 * AOth2
   AMOth2 = INTEG(RAMOth2, 0.0)

! Venous Blood
    RAVB2 = (QLiv*CVLiv2) + ((QOth+QFat)*CVOth2) + RMetVB1 + kIV2 &
        - (QC*CVB2) - RAFilt2
     AVB2 = INTEG(RAVB2, 0.0)
     CVB2 = AVB2 / VVB
    AUCB2 = INTEG(CVB2, 0.0)

!  Filtration
  RAFilt2 = kFilt2 * AVB2
   AFilt2 = INTEG(RAFilt2, 0.0)

! Average Blood (umoles)
     CTB2 = (AAB2 + AVB2) / (VAB + VVB)
   AUCTB2 = INTEG(CTB2, 0.0)


!************************   n-Butyraldehyde   ************************
! Arterial Blood (umoles)
    RAAB3 = QC * (CVLung3 - CAB3)
     AAB3 = INTEG(RAAB3, AAB30)
     CAB3 = AAB3 / VAB
                                AUCAB3 = INTEG(CAB3, 0.0)

! Liver (umoles)
   RALiv3 = (QLiv * (CAB3 - CVLiv3)) + RMetLiv2 + RMR3 - RMetLiv3
    ALiv3 = INTEG(RALiv3, 0.0)
    CLiv3 = ALiv3 / VLiv
   CVLiv3 = CLiv3 / PLiv3
  AUCLiv3 = INTEG(CLiv3, 0.0)

! Liver Metabolism (umoles)
 RMetLiv3 = (VMLiv3 * CVLiv3) / (KMLiv3 + CVLiv3)
  MetLiv3 = INTEG(RMetLiv3, 0.0)

! Amount remaining to be absorbed into liver from GI (umoles)
     RMR3 = kA * MR3
      MR3 = Dose3 - INTEG(RMR3, 0.0)
```

```
! Chamber concentration (umoles/mL)
    RACh3 = (Rats * QP * CEx3) - (FA3 * Rats * QP * CCh3) - (kLoss3 * ACh3) &
        - (kLoss3R * Rats * ACh3)
     ACh3 = INTEG(RACh3, ACh03)
     CCh3 = ((ACh3 / VCh) * ClOn) + (Conc3 * (1.0 - ClOn))
   CCPPM3 = CCh3 * 24450.0
              CLoss3 = INTEG(((kLoss3 * ACh3) + (kLoss3R * Rats * ACh3)), 0.0)

            IF (SCINPPM3 .GT. 0.) THEN
                        CCPPM3PCT=100.*CCPPM3/SCINPPM3  !BuCOO conc. as % of intitial <GD>
            ELSE
                        CCPPM3PCT = 0.
            END IF

! Lungs
!  Amount in Lungs (umoles)
  RALung3 = (QP * ((FA3 * CCh3) - CEx3)) + (QC * (CVB3 - CVLung3))
   ALung3 = INTEG(RALung3, 0.0)
   CLung3 = ALung3 / VLung
  CVLung3 = CLung3 / PLung3

!  Amount Inhaled (umoles)
  RInhal3 = FA3 * QP * CCh3
  AInhal3 = INTEG(RInhal3, 0.0)
 AInhal3C = AInhal3 * Rats

!  Amount Exhaled (umoles)
     CEx3 = CvLung3 / PB3
    RAEx3 = QP * CEx3
     AEx3 = INTEG(RAEx3, 0.0)
    AEx3C = AEx3 * Rats

! Other Perfused Tissues (umoles)
   RAOth3 = ((QOth + QFat) * (CAB3 - CVOth3)) + RAMOth2
    AOth3 = INTEG(RAOth3, 0.0)
    COth3 = AOth3 / (VOth + VFat)
   CVOth3 = COth3 / POth3

! Venous Blood (umoles)
    RAVB3 = (QLiv*CVLiv3) + ((QOth+QFat)*CVOth3) + kIV3 - (QC*CVB3)
     AVB3 = INTEG(RAVB3, 0.0)
     CVB3 = AVB3 / VVB
    AUCB3 = INTEG(CVB3, 0.0)

! Average Blood (umoles)
     CTB3 = (AAB3 + AVB3) / (VAB + VVB)
   AUCTB3 = INTEG(CTB3, 0.0)

!*************************   Butyric Acid   *************************
! Arterial Blood (umoles)
    RAAB4 = QC * (CVLung4 - CAB4)
     AAB4 = INTEG(RAAB4, AAB40)
     CAB4 = AAB4 / VAB
                                    AUCAB4 = INTEG(CAB4, 0.0)

! Liver (umoles)
   RALiv4 = (QLiv * (CAB4 - CVLiv4)) + RMetLiv3 + RMR4 - RMetLiv4
```

```
    ALiv4 = INTEG(RALiv4, 0.0)
    CLiv4 = ALiv4 / VLiv
   CVLiv4 = CLiv4 / PLiv4
  AUCLiv4 = INTEG(CLiv4, 0.0)

! Liver Metabolism (umoles)
 RMetLiv4 = (VMLiv4 * CVLiv4) / (KMLiv4 + CVLiv4)
  MetLiv4 = INTEG(RMetLiv4, 0.0)

! Amount remaining to be absorbed into liver from GI (umoles)
     RMR4 = kA * MR4
      MR4 = Dose4 - INTEG(RMR4, 0.0)
! Chamber concentration (umoles/mL)
    RACh4 = (Rats * QP * CEx4) - (FA4 * Rats * QP * CCh4) - (kLoss4 * ACh4) &
        - (kLoss4R * Rats * ACh4)
     ACh4 = INTEG(RACh4, ACh04)
     CCh4 = ((ACh4 / VCh) * ClOn) + (Conc4 * (1.0 - ClOn))
   CCPPM4 = CCh4 * 24450.0
   CLoss4 = INTEG(((kLoss4 * ACh4) + (kLoss4R * Rats * ACh4)), 0.0)

            IF (SCINPPM4 .GT. 0.) THEN
                    CCPPM4PCT=100.*CCPPM4/SCINPPM4  !BuCOOH conc. as % of intitial <GD>
            ELSE
                    CCPPM4PCT = 0.
            END IF
! Lungs
!  Amount in Lungs (umoles)
  RALung4 = (QP * ((FA4 * CCh4) - CEx4)) + (QC * (CVB4 - CVLung4))
   ALung4 = INTEG(RALung4, 0.0)
   CLung4 = ALung4 / VLung
  CVLung4 = CLung4 / PLung4

!  Amount Inhaled
  RInhal4 = FA4 * QP * CCh4
  AInhal4 = INTEG(RInhal4, 0.0)
 AInhal4C = AInhal4 * Rats

!  Amount Exhaled
     CEx4 = CvLung4 / PB4
    RAEx4 = QP * CEx4
     AEx4 = INTEG(RAEx4, 0.0)
    AEx4C = AEx4 * Rats

! Other Perfused Tissues (umoles)
   RAOth4 = (QOth + QFat) * (CAB4 - CVOth4) - RMetOth4
    AOth4 = INTEG(RAOth4, 0.0)
    COth4 = AOth4 / (VOth + VFat)
   CVOth4 = COth4 / POth4

! Other Perfused Tissue Metabolism (umoles)
 RMetOth4 = (VMOth4 * CVOth4) / (KMOth4 + CVOth4)
  MetOth4 = INTEG(RMetOth4, 0.0)

! Venous Blood (umoles)
    RAVB4 = (QLiv*CVLiv4) + ((QOth+QFat)*CVOth4) + kIV4 - (QC*CVB4) - RAFilt4
     AVB4 = INTEG(RAVB4, 0.0)
     CVB4 = AVB4 / VVB
```

```
    AUCB4 = INTEG(CVB4, 0.0)
!  Filtration
   RAFilt4 = kFilt4 * AVB4
    AFilt4 = INTEG(RAFilt4, 0.0)

! Average Blood (umoles)
     CTB4 = (AAB4 + AVB4) / (VAB + VVB)
    AUCTB4 = INTEG(CTB4, 0.0)
              TERMT(T.GE.TStop)

!*************************   Mass Balance   **************************
! Total System Mass Balance
   MassBal = TMass1 + AEx1 + AFilt1 + TMass2 + AEx2 + AFilt2 + TMass3 + AEx3 &
          + TMass4 + AEx4 + AFilt4 + TMetab4
! Mass Balance for BuAc (umoles)
    TMass1 = AAB1 + AFat1 + ALiv1 + ALung1 + AOth1 + AVB1
  TMetab1a = MetAB1 + MetLiv1 +  MetVB1 + MetOth1
 TMassTot1 = TMass1 + TMetab1a  + AEx1 + AFilt1
    Delta1 = ((IVDose1 * 1000.0/MW1) * BW) + AInhal1 + Dose1 + AAB10 - TMassTot1
   Delta1C = ACh01 - ACh1 - AInhal1C - CLoss1 + AEx1C
! Mass Balance for BuOH (umoles)
    TMass2 = AAB2 + ALiv2 + ALung2 + AOth2 + AVB2
   TMetab2 = MetLiv2 + AmOth2
 TMassTot2 = TMass2 + TMetab2 + AEx2 + AFilt2
    Delta2 = ((IVDose2 * 1000.0/MW2) * BW) + AInhal2 + Dose2 + AAB20 &
          - TMassTot2 + TMetab1a
   Delta2C = ACh02 - ACh2 - AInhal2C - CLoss2 + AEx2C
! Mass Balance for BuCHO (umoles)
    TMass3 = AAB3 + ALiv3 + ALung3 + AOth3 + AVB3
   TMetab3 = MetLiv3
 TMassTot3 = TMass3 + TMetab3 + AEx3
    Delta3 = ((IVDose3 * 1000.0/MW3) * BW) + Dose3 + AAB30 + TMetab2 &
          + AInhal3 - TMassTot3
   Delta3C = ACh03 - ACh3 - AInhal3C - CLoss3 + AEx3C

! Mass Balance for Butyrate (umoles)
    TMass4 = AAB4 + ALiv4 + ALung4 + AOth4 + AVB4
   TMetab4 = MetLiv4 + MetOth4
 TMassTot4 = TMass4 + TMetab4 + AEx4 + AFilt4
    Delta4 = ((IVDose4 * 1000.0/MW4) * BW) + Dose4 + AAB40 &
          + AInhal4 - TMassTot4 + TMetab3
   Delta4C = ACh04 - ACh4 - AInhal4C - CLoss4 + AEx4C

    Total1 = MetLiv1 + MetAB1 + MetVB1
    Total2 = MetLiv2 + AMOth2
    Total3 = MetLiv3
    Total4 = MetLiv4

  IF (AInhal1.NE.0.0) THEN
     Recov = 100.0 * (TMassTot1 / AInhal1)
  ELSE
     Recov = 0.0
  ENDIF
! Check Blood Flows
     QTot = QFat + QLiv + QOth
    QRecov = 100.0 * (QTot / QC)
```

```
END          ! End of Derivative
END          ! End of Dynamic

TERMINAL

END          ! End of Terminal
END          ! End of Program
```

D.2. Summary of Model Evaluation

U.S. EPA performed an evaluation and quality control check of the PBPK model for n-butanol published by Teeguarden et al. (2005). The evaluation included confirmation of accurate implementation of the model described in Teeguarden et al. (2005) and evaluations of the performance of the rat and human PBPK models that were not reported in Teeguarden et al. (2005). These included evaluations of residuals for model predictions compared to observations made in rat i.v. and inhalation studies and in human inhalation studies; comparisons of observed and predicted AUC for blood n-butanol–time profiles in rats and humans; and alternative values for metabolism parameters were explored or estimated by statistical optimization. The conclusions from these analyses as follows:

1. The value adopted by Teeguarden et al. (2005) for the K_m of metabolism of n-butanol (model variable: KMLivC2) in rats did not have a strong empirical basis and, therefore, the value derived from in vitro studies in rat hepatic cytosol preparations (Carlson and Olson, 1995) was selected as the preferred value for use in dosimetry calculations. Use of this value was supported by statistical optimization analyses, which showed that model performance was not substantially improved or degraded by use of the empirically-based value. Since the value for KMLivC2 was modified from Teeguarden et al. (2005), values for the V_{max} for n-butanol metabolism in the liver (model variable: VMLivC2) and the rate constant for metabolism of n-butanol in other tissues (model variable: KOthC2) were re-optimized and evaluated with data from i.v. and closed-chamber inhalation studies conducted in rats.

2. The same empirical value for KMLivC2 was also adopted for the human model and values for VMLivC2 and KOthC2 were re-optimized against data from human exposures to n-butanol (Astrand et al., 1976). The optimized values resulted in improved fit to the human data and were adopted for the human model.

3. The validity of the human model is not as strongly supported as the rat model; it has been tested against data from a single study. The metabolism parameter values for the human model are highly sensitive to observations made in a single individual, and the influence of these data on the parameter value estimates will affect the predicted n-butanol blood AUC. However, even with these uncertainties, the human model provides improved confidence for interspecies extrapolation of pharmacokinetics and, therefore, was used in making dosimetry extrapolations from rats to humans.

On the basis of this evaluation, U.S. EPA concluded that the PBPK model was suitable for use in deriving the RfC for n-butanol.

D.3. Uncertainties in PBPK Modeling of HECs Related to Selection of Values for Metabolism Parameters

Values for n-butanol metabolism parameters used for the dosimetry modeling are shown in Table D-1. Values for n-butanol metabolism parameters, V_{max} for metabolism in the liver (model variable: VMLivC2) and the rate constant for metabolism of n-butanol in other tissues (model variable: KOthC2) were optimized against data for blood n-butanol concentrations in humans during and following inhalation exposure to 100 or 200 ppm n-butanol (Astrand et al., 1976), while keeping the value for the K_m for liver metabolism (model variable: KMLivC2) set at the empirically-based value of 0.16 mM (Carlson and Olson, 1995). Optimizing these parameters resulted in improvement of model performance as judged by residuals for the Astrand et al. (1976) observations. Improved model performance was the basis for selecting the optimized values over allometric scaling of the rat values. The impact of this decision on the estimate of the HEC corresponding to the rat NOAEL is shown in Table D-2. The NOAEL HEC is 34% lower when the allometrically scaled rat values are used in the human model (39 versus 59 mg/m^3).

Table D-1. n-Butanol metabolism parameters

Parameter	Abbreviation	Values[a]		Basis
		Rat	Human	
Maximum metabolic rate in liver	VMLivC2	2.17	0.62	Optimized (see model evaluation report)
Affinity constant in liver	KMLiv2	0.16	0.16	Estimate for rat (Carlson and Olson, 1995)
First-order metabolic rate constant in other tissues	KOthC2	4.0	20.1	Optimized (see model evaluation report)

[a]Units: V_{max} (mmol/hour/kg$^{0.75}$); K_m (mM); K_{other} (kg$^{0.25}$/hour).

With respect to the urinary elimination rate parameters, the PBPK model does not incorporate the interaction of butyric acid with colonocytes and it is well known that the basic form, butyrate, is a major substrate for colon cells (see Thibault et al., 2010 for a recent review). However, kinetic information on urinary clearance for butyric acid following n-butanol administration is not available and was therefore not incorporated into the model.

Table D-2. Results of PBPK modeling of NOAEL concentration from subchronic rat study

Source of human parameter values	NOAEL rat mg/m^3	NOAEL rat ppm	AUCAB2_24 rat mM·24 hr	AUCAB2_24 human mM·24 hr	NOAEL HEC human ppm	NOAEL HEC human mg/m^3
Optimized[a]	154	50	0.01282	0.01282	19.21	59.2
Allometrically scaled from rat values[b]	154	50	0.01282	0.01282	12.76	39.3

[a]KMLivC2 = 0.16 mM, VMLivC2 = 0.62 mmol/hour/$kg^{0.75}$, KOthC2 = 20.1 $kg^{0.25}$/hour.
[b]KMLivC2 = 0.16 mM, VMLivC2 = 2.17 mmol/hour/$kg^{0.75}$, KOthC2 = 4.0 $kg^{0.25}$/hour.

Source: Korsak et al. (1994).