TOWNSHIP HIGH SCHOOL DISTRICT 113

HIGHLAND PARK HIGH SCHOOL

WOLTERS FIELD PERMEABLE PARKING IMPROVEMENTS

A Project Designed to Reduce Stormwater Runoff by Installing BMP's to Improve Water Quality

Illinois Green Infrastructure Grant
For
Stormwater Retention and Infiltration

FAA NUMBER: IGIG 1307

Project Coordinator: Robert Hansen
Daniel Creaney Company
Northbrook, Illinois
August 1, 2015

This report was prepared by Township High School District 113 using Illinois Environmental Protection Agency Illinois Green Infrastructure Grant funds. The findings and recommendations herein are not necessarily those of the funding agencies.

INDEX

- Project Overview
- Project Implementation
- Best Management Practices Recap
- Project Cost Summary
- Project Team
- Operations & Maintenance Through 2025
- Appendix
    - Project Photographs

PROJECT SIGN

PROJECT OVERVIEW

Township High School District 113 received an Illinois Green Infrastructure Grant in the amount of $368,869.00. The District used the Illinois Green Infrastructure Grant funding to remove existing asphalt parking lots and to install two permeable paver parking lots, three grass paver parking areas and a bio-swale for the overflow runoff from the Highland Park High School (HPHS) Wolters Field parking lots. The project agreement ran from November 19, 2013 to May 1, 2016.

The Township High School District 113 is taking a more sustainable approach to facility improvements through stormwater management and the reduction of nonpoint source pollution.

The project is located at the Wolters Field Athletic Complex at 1040 Park Avenue West in Highland Park, Illinois. Wolters Field is home to Highland Park Highs School's varsity football/lacrosse/soccer field, varsity and freshman baseball fields, and varsity softball field. Community members also have access to Wolters Field and use it for fitness throughout the year.

Recent improvements to the complex, in addition to this project, include a new synthetic turf competition field, natural turf practice fields, varsity softball facility, athletic center, concession building and renovated transportation center and new stadium bleachers.

The existing asphalt parking lots currently sheet drained to a ditch which is tributary via a storm sewer to the Skokie River. (IL-HCCD-01) The addition of these BMP's will have a very positive impact on the stormwater management in the area. The parking lot improvements support the goals and objectives articulated in the North Branch of the Chicago River Watershed-Based Plan. By implementing the permeable parking improvements, the District will help to address several objectives as outlined in the Watershed-Based Plan.

The project was completed in two phases, 2014 and 2015 summer construction. Wolters Field is used during the summer months for many activities. Phasing the project was necessary to allow access and parking for those activities while constructing each phase of the project. The grant funding assisted both phases of construction. Each phase included both the permeable interlocking brick pavers as well as the permeable grass paver system.

An Operations & Maintenance Manual was created to monitor these BMP's. The Operations & Maintenance Manual will provide water quality protection through September 2025.

The work began in May of 2014 and construction was completed in July, 2015.

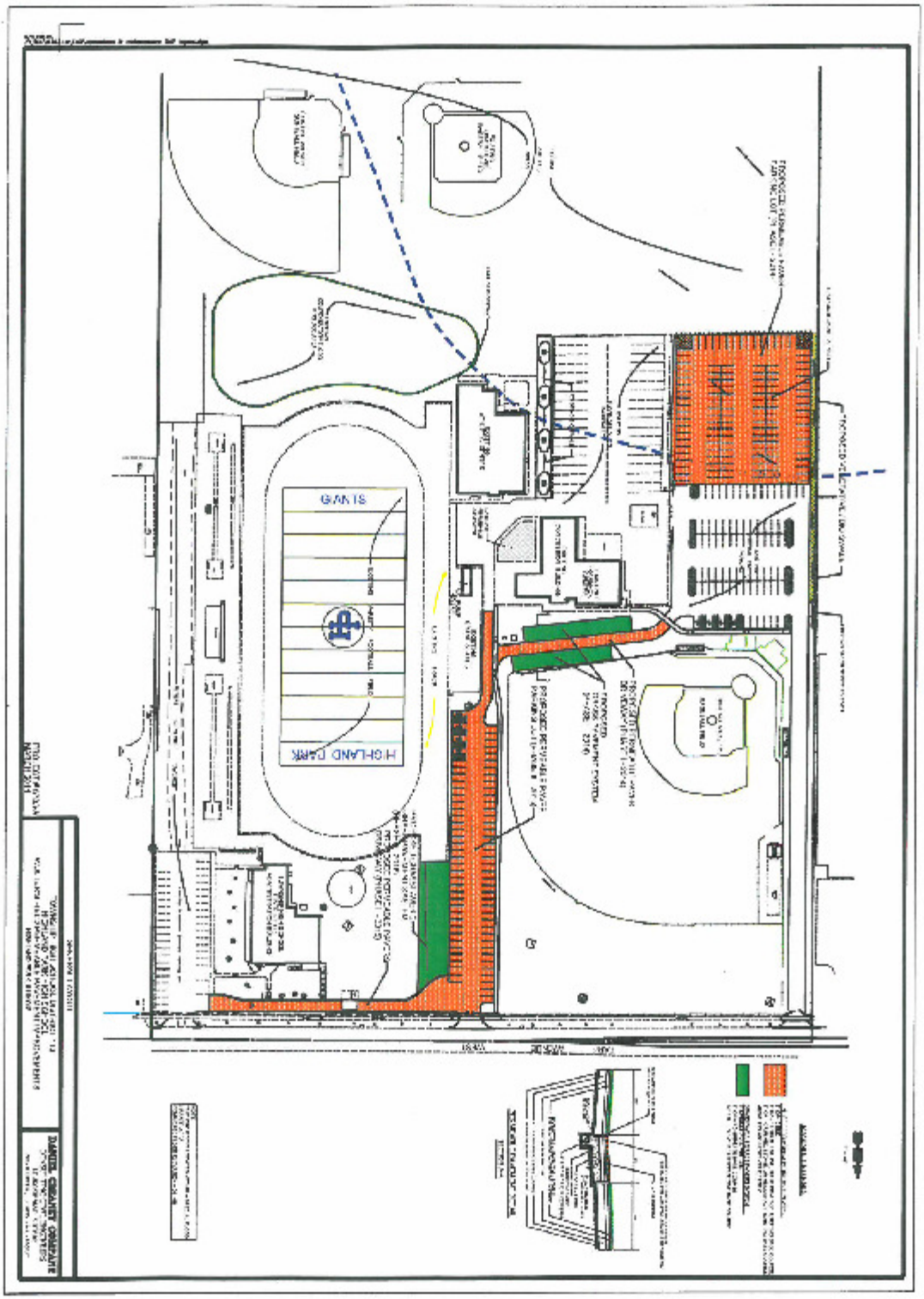
GIANTS
HIGHLAND PARK

PROJECT IMPLEMENTATION

Township High School district 113 and Daniel Creaney Company worked with the City of Highland Park to obtain a building permit and the Lake County Stormwater Management Commission to obtain a Watershed Development Permit to do the work.

PHASE I CONSTRUCTION – 2014

The work completed during the 2014 summer construction season included the removal of 35,100 SF of existing asphalt pavement from the west parking lot, compaction of the existing stone base course and the installation of the new permeable brick pavers. (See general layout for location). Prior to the paver installation a new underdrain system was installed to assist during the heavier rain storm events. Phase I construction also included the construction of a permeable paver connecting driveway between the existing varsity baseball lot and the center drive. (See general layout for location). On each side of the connecting driveway is where the Grasspave system was installed for overflow parking during events. The Grasspave 2 system was installed for temporary parking use but never intended for everyday use. The Grasspave 2 system was 18' in depth and 140' long on the south side and 130' long on the north side of the connecting driveway.

The 3rd BMP installed in Phase I was the retrofit of an existing ditch to a bio-swale. This swale will collect any overflow runoff from the parking lots and provide water quality treatment before entering the existing storm sewer that discharges to the Skokie River. The top 4" of soil within the bio-swale was amended with 50% topsoil and 50% sand. The bio-swale was then planted with a variety of 195 wetland plants. (See plant layout in Operations & Maintenance Manual).

It was noted in the spring of 2015 that approximately 4860 SF of the Grasspave 2 system never became fully established. This is partially due to the dry time of year and the lack of fertilizer used to establish growth. The school district currently has a policy not to apply fertilized or herbicide on their property. The district has decided to give this area until September of 2015 to establish growth before installing sod.

PHASE II CONSTRUCTION – 2015

The scope of Phase II construction included the installation of the underdrain system, 36,270 SF permeable paver stadium parking lot, and a connecting driveway to the existing administration building parking lot.

As work commenced in the spring of 2015, 36,270 SF of the existing asphalt and base course was removed full depth and the drainage system was installed. During the preparation of the subgrade for the new pavement, areas of unsuitable soils, such as topsoil and cinders were discovered over approximately 50% of the new pavement area. These areas also had a high moisture content and very difficult to dry out. Due to excessive rain events. These areas were addressed by undercutting aproximately 0.5 feet of the unsuitable areas, using a heavier geotextile fabric and replacing with CA-1 stone. The addition of a geo-grid stabilization mat was also used within the stone base to achieve proper compaction.

After the remaining curbs and sidewalks were installed, the CA-11 setting bed was prepared for the installation of the permeable brick paver surface. The pavers were installed with a mechanical system which allows for a much faster installation. The surface joints were then filled with a fine limestone aggregate to allow for proper infiltration.

The design team revisited options for the area designated for the grass pave system due to the limited success of Phase I. Filling the grass pave cylinder mats with stone was considered. Also, installing sod over the sand topsoil mix instead of seeding. After pricing both alternates, and reviewing other installations, it was decided to install the sod. The other installations of Grasspave 2 when sodded did not have problems getting established.

Other improvements installed in Phase II, but not included in the grant, were curbs, sidewalks, fences, gates and a rolling gate for the main entrance. Several areas were regraded during construction to improve the overall drainage. In the track and field competition areas which previously held water after a significant rain event.

BEST MANAGEMENT PRACITICES (BMP) RECAP

Township High School District 113 removed approximately 71,370 s.f. of impervious asphalt pavement and replaced it with 72,140 s.f. of permeable pavement and 11,600 s.f. of "grass pave 2" grass pavement system. The 3rd BMP was retrofitting an existing swale approximately 10' wide by 350' long with natural plants and grasses to improve water quality benefits. These BMP improve the existing hydrology of the site, reducing stormwater runoff rates and volumes, and will reduce the amount of nonpoint source (NPS) pollution that is conveyed to the Skokie River, which is located approximately 950 feet west of property.

Based on the Illinois IEPA BMP reduction spreadsheet for urban runoff, the following pollutant removal performance is expected:

PERMEABLE PAVERS

- Total suspended solids: 90% (approx. 2214 lbs/year)
- Total phosphorous: 50% (approx. 1.00 lbs/year)
- Total nitrogen: 85% (approx. 12.00 lbs/year)

GRASS PAVE SYSTEM

- Total suspended solids: 90% (approx. 239 lbs/year)
- Total nitrogen: 50% (approx. 1.00 lbs/year)

BIO-SWALE

- Total suspended solids: 65% (approx. 778 lbs/year)
- Total nitrogen: 14% (approx. 1.00 lbs/year)

FLOW REDUCTION

We have calculated a reduction of stormwater runoff for all BMP's combined to be approximately 80%. This is a significant reduction for an area of 1.65 acres.

We expect these BMP improvements to have a positive impact on the Skokie River which is located in the North Branch of the Chicago River.

PROJECT COST SUMMARY

1. Direct Labor		$ 8,605.00
Administrative		$ 1,880.00
Professional/Techical		$ 6,725.00
2. Indirect Cost		$ 1,404.00
Indirect		$ 1,404.00
3. Subcontractors		$ 541,169.39
Construction		$ 518,633.00
Construction Oversight		$ 22,536.39
	TOTAL	$ 551,178.39

Assitance Amount at	70%	$ 368,869.00
Recipient Share at	30%	$ 182,309.39

The original budget of $526,955.00 provided $368,869.00 (70%) IGIG funds with the Township High School District 113 providing $158,086.00 (30%) in matching funds. The final construction cost for the project was $551,178.39. The IGIG assistance remaining the same at $368,869.00 and District 113 portion was increased to $182,309.39*. This difference reflects the cost for demolition, earth excavation, storm sewer, drainage structures, concrete curbs, sidewalks, fencing, and gates.

*note an additional $ 172,232.02 was expended on the project over and above those costs documented in the final project invoice.

PROJECT TEAM

OWNER

Township High School District 113
1040 Park Avenue West
Highland Park, Illinois 60035
Barry Bolek, Assistant Superintendent for Finance
Daniel Mortensen, Facilities Director
Andrea Johnson. Director of Equity and Grants

CIVIL ENGINEER

Daniel Creaney Company
Consulting Civil Engineers
450 Skokie Boulevard # 105
Northbrook, Illinois 60062
Robert Hansen, Project Manager & Coordinator

CONTRACTORS

Team REIL Construction, Inc.
17421 Marengo Rd.
Union, Illinois 60180
Tim Cederlund, Vice President & Project Manager

CR Schmidt
Brick Paving & Retaining Walls
29W030 Main Street, Suite 2014
Warrenville, Illinois 60555
Olivia Lockett, Owner

Township High School District 113
1040 Park Avenue West
Highland Park, IL 60035
www.dist113.org

WOLTERS FIELD
OPERATIONS AND MAINTENANCE MANUAL

Project Best Management Practices

Wolters Field permeable paver project will begin in June 2014. The key feature of the Wolters Field project will consist of the removal of 71,370 s.f. of impervious asphalt pavement and to replace it with 72,140 s.f. of permeable pavement and 11,600 s,f, of "Grasspave 2" grass pavement. The third BMP will be retrofitting an existing swale with native plants to improve water quality benefits. These BMP improvements will improve the existing hydrology of the site, reducing storm water runoff rates and volumes, and will reduce the amount of nonpoint source (NPS) pollution that is conveyed to the Skokie River, located approximately 950 feet west of the property. (See O & M BMP Layout) According to financial assistance agreement IGIG 1307, these best management practices need to be operated and maintained for water quality protection through September 2025.

Routine Maintenance For Paver Surface

The permeable paver surface must be managed carefully to ensure that no foreign material or coating is introduced that could limit its effectiveness. The permeable pavers will be inspected annually, or on an as-needed basis, to ensure that the drainage voids on the surface are clean and clear. Visible sediment and pooling of water in any area of the site are indications that the pavers require cleaning.
Proper routine maintenance therefore, will ensure the integrity of the paver surface and optimal drainage performance.

Routine maintenance will require vacuum sweeper equipment. The approved vacuuming equipment for this use is the Elgin Whirlwind and the Allianz Model 650. Regenerative air sweepers – not ideal, but may be used are the Tymco Model 210, Schwarze 348 and Victory. Also, "walk behind" units such as the Billy Goat models, the 5700 industrial-strength Scrubber by Tennant, sidewalk class vacuum sweepers made by Nilfish, Advance and Hako are acceptable for use however only on a low setting. Simple broom sweepers are not to be used.

This approach has been proven effective for dislodging surface encrusted sediment that can clog permeable pavement systems. The paving surface will be vacuumed in dry weather and without the use of water to remove encrusted sediment from the joints between pavers. Paver areas will be vacuumed twice yearly – once in spring and once in fall after buds, leaves and other tree and landscape debris have fallen for the season. (See Maintenance Timetable)

As with any pavement, snow plowing will be utilized after snow events. Grounds personnel will be instructed to plow at low speeds, using a composite snow plowing blade. The blade must be raised one inch above the normal setting. In the event that deicers should be used, the District has approved the following non-toxic deicers:

- Liquid: Magic-O, Ice B'Gone, Ice Ban, Geomelt, and other magnesium choloride-based products
- Salt Products: Magic Salt, calcium chloride, magnesium chloride, potassium chloride, urea, and calcium magnesium acetate

At the end of the winter, parking lots will be monitored for potential gravel loss and on a weekly basis the need for weeding. The gravel lost from the voids between the pavers will be replaced at the end of each winter. Weeding is to be done by hand. Use of herbicides on invasive herbaceous species may include the following:

- Habitat: non-selective herbicide for use over water
- Rodeo: non-selective herbicide for use over water
- Aquaneat: non-selective herbicide for use over water
- Roundup: non-selective herbicide for use in dry areas

Herbicide will not be applied if precipitation is expected within the next 12 hours or if standing water or puddles exist on the soil surface. When working near of in aquatic conditions, aquatic label herbicide is required.

Maintenance repair will be determined after major rain events and will be done through visual inspection. Areas of the paver surface that show pooling of water on the surface will be repaired by using a vacuum sweeper with water jets, sweeper, and vacuum bar attachment to clear sediment, and joint material on pavers. Any cleared material will be washed and replaced with new joint material to refill the joints. Broken or dislodged pavers will be replaced or reset as necessary.

Brick Paver Repair

If pavers need to be removed due to heaving, maintenance work under an area, or breakage steps:

1. Remove a paver with Paver Extractor tool from Pave Tech Hardscope (800) 247-3343.
2. Once the first paver is removed it is easier to remove adjacent pavers needing replacement.
3. Do work necessary under the pavement-see cross section below for base materials used.
   a. If work is deep under the parking lot, the gravel layers under the paving stones separate when removing.
   b. If work requires is leveling or replacing a broken paver no excavation of the ground is necessary.
4. Replace stone under the pavers according to the cross section below.
5. Compact base to 90%.
6. Use leveling course of CA-16 to set pavers.
7. Compact pavers with plate vibrator.
8. Fill voids in pavers with CA-16.

Bio-Swale Maintenance

Bio-swale maintenance is particularly important during the first few months after planting. Frequent watering and weeding is required to ensure plant establishment. Weeding is easiest when the soil is moist and the weeds are small, typically in early spring, but remains important throughout the growing season.

Ongoing attention and monitoring of bio-swale area during plant establishment is critical. Weather changes, such as heavy rain events, drought, and strong winds contribute to soil loss and successful plant establishment. On a weekly basis and subsequent to any major weather event, the bio-swale should be cleared of any litter, trash, or debris that may inhibit plant growth and establishment. (See Maintenance Schedule & Bioswale Planting Plan)

Grasspave 2

- Pavement surface is vegetation, good seeding, fertilizing, and water procedures for turf establishment will be practiced.
- Lawn care should follow normal watering, fertilizing, and mowing procedures. Vegetated surfaces are intended for infrequent or occasional traffic with a maximum H-10 loading. The pavement should be monitored to ensure traffic frequency and loading does not exceed the pavement design.
- With vegetated systems, once healthy turf has been established, the Grasspave structure will have minimal visibility when good turf maintenance practices are followed. Creating visibility for access lanes may be necessary. Delineation methods include in-ground curbing, above-ground curbing, shrubbery or vegetation, perimeter lighting or delineation markers. (See Maintenance Schedule and O & M BMP Layout)
- If Grasspave 2 area should need to be reseeded, seed mix used shall be 30% Sonoma Kentucky Blue Grass, 25% Champagne Kentucky Blue Grass, 25% Bordeaux Kentucky Blue Grass and 20% Secretariat Perennial Ryegrass. Seed shall be applied at 220lbs/AC.)

WOLTERS FIELD

PERMEABLE PAVERS PARKING FACILITY/BIOSWALE – OPERATIONS & MAINTENANCE TIMETABLE

Area	Key Activities	Approach	Timing	Lead
Porous Pavement	Education & outreach	District 113 staff sustainability training will include unit on porous pavement information about porous pavement as stormwater BMP will be provided to community through website.	Ongoing	Site Manager
	Prevention	Use of unprotected surface for construction staging, soil/mulch storage not allowed	Ongoing	Site Manager
		Biannual vacuuming (must use approved equipment) of surface and cleaning of stone infiltration joints	April 1 & Oct. 1	Site Manager
		Removal of trash/litter	Ongoing	Site Manager
		Maintenance of planted areas on and adjacent to pavement (with special care to prevent soil washout/contamination of pavers)	Ongoing	Site Manager
	Snow/Ice Removal	Snow must set blade 1" higher than usual using composite blade.	Ongoing	Site Manager
		Environmentally-benign deicers to be used	Ongoing	Site Manager
		Use of abrasives, such as sand cinders are not allowed on or adjacent to porous pavement	Ongoing	Site Manager
	Repairs	Annual inspection for pavement settling	April 1	Site Manager
		Damaged areas to be repaired with new pavers of same type with same approach used for initial installation (see section detail on BMP layout)	Ongoing	Site Manager
Bioswales	Regular Maintenance	Weeding/Pest control	Weekly	Site Manager
	Monthly Review	Visual assessment of plant health, moisture conditions, and weed pressure	1st of month	Site Manager
	Event Review	Review immediately following extreme events, s.a., flood or drought	As necessary	Site Manager
	Drought Maintenance	Daily watering as required by species plant/drought conditions	As necessary	Site Manager
Grasspave 2	Regular Maintenance	Weeding, Mowing	Weekly	Site Manager
	Turf Maintenance	Fertilizer & Herbicide	As Necessary	Site Manager
	Drought Maintenance	Daily irrigation as required	As necessary	Site Manager

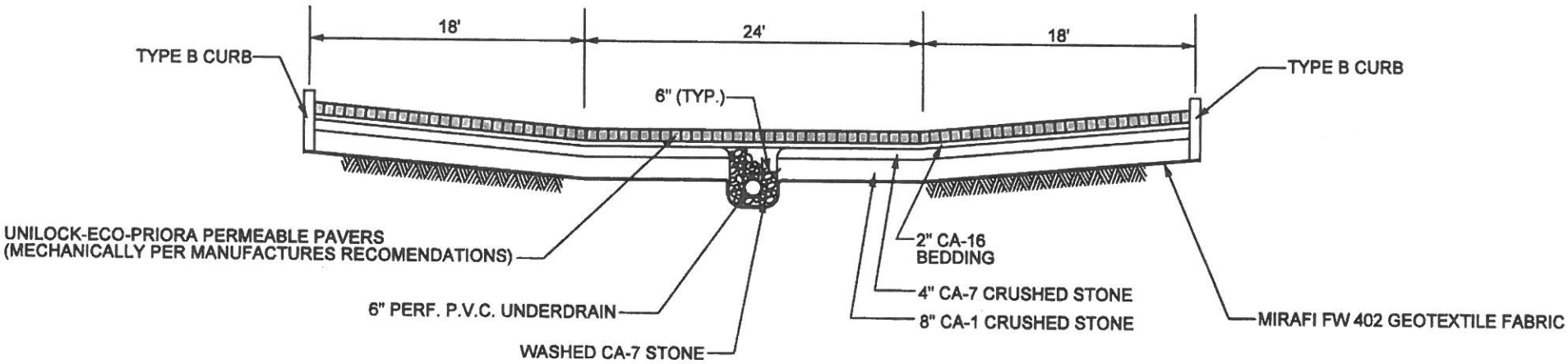

PERVIOUS PAVER DETAIL
(PHASE 2)

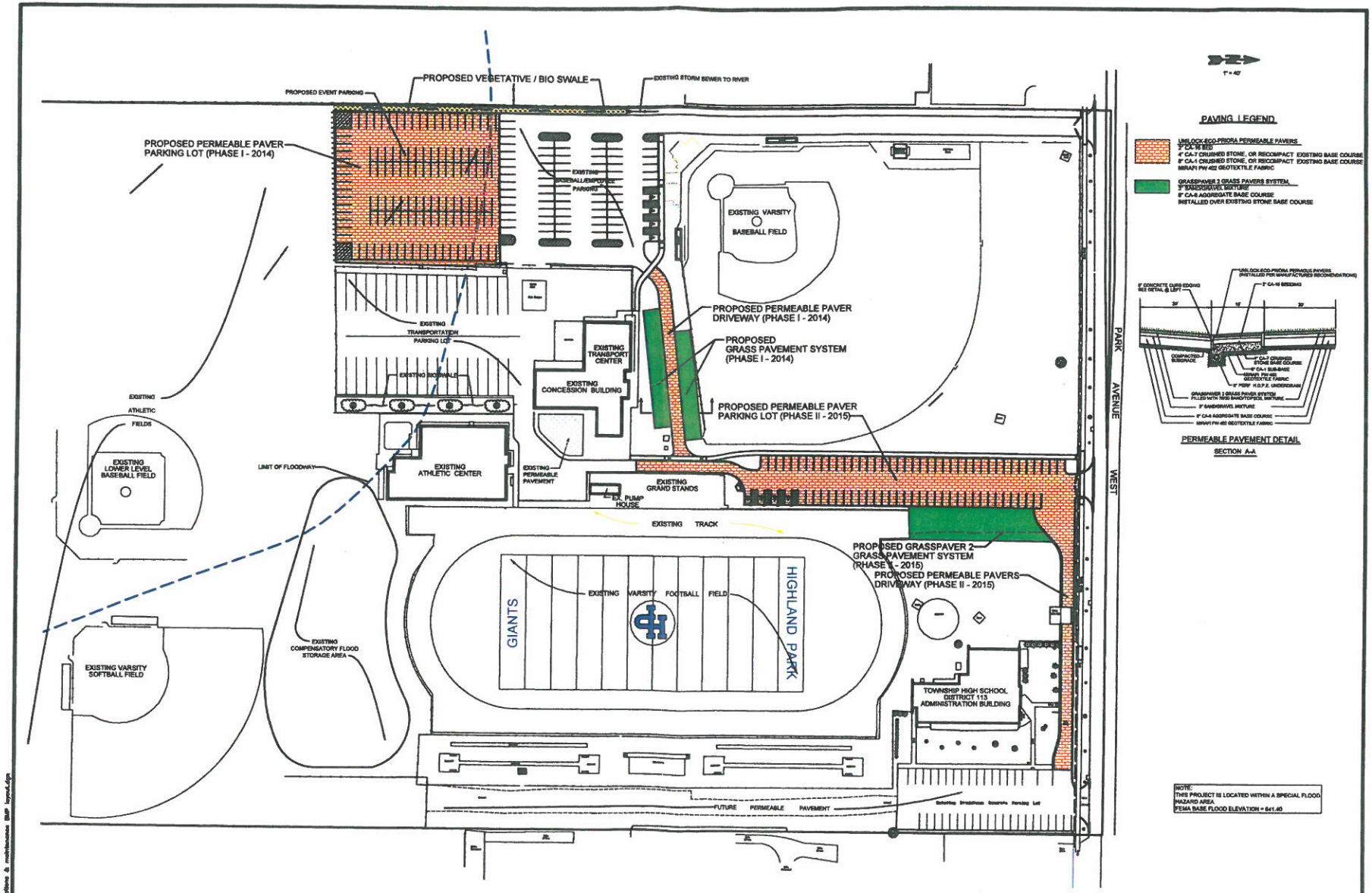

OPERATIONS & MAINTENANCE BMP LAYOUT

TOWNSHIP HIGH SCHOOL DISTRICT 113
HIGHLAND PARK HIGH SCHOOL
WOLTER'S FIELD PERMEABLE PAVEMENT IMPROVEMENTS
HIGHLAND PARK, ILLINOIS

PROJECT # 6783-A
MARCH 2014

DANIEL CREANEY COMPANY
CONSULTING CIVIL ENGINEERS
450 SKOKIE BLVD. SUITE 105
NORTHBROOK, ILLINOIS (847) 480-3757

3/10/2014
J:\DCE\6783-A\CAD\operations & maintenance BMP layout.dgn

ORIGINAL PLANTING LIST

QUANITITY	KEY	SCIENTIFIC NAME	COMMON NAME	SIZE	SPACING
50	A	ASCLEPIAS INCARNATA	SWAMP MILKWEED	gt38	24"
30	B	ASTER NOVAE-ANGLIAE	NEW ENGLAND ASTER	gt38	24"
30	C	BAPTISIA LEUCANTHA	WHITE WILD INDIGO	gal.	36"
45	D	CAREX EMORYI	RIVERBANK	gt38	24"
45	E	CAREX GRAYI	MORNING STAR SEDGE	gt38	24"
40	F	CAREX MUSKINGUMENSIS	OVAL SWAMP SEDGE	gt38	24"
35	G	CAREX PENSYLVANICA	PENNSYLVANIA SEDGE	gt38	24"
50	H	CAREX VULPINOIDEA	FOX SEDGE	gt38	24"
45	I	LIATRIS PYCHNOSTACHYA	BLAZING STAR	gt38	24"
35	J	LOBELIA CARDINALIS	CARDINAL FLOWER	gt38	24"
40	K	LOBELIA SIPHILITICA	GREEN BLUE LOBELIA	gt38	24"
35	L	PANICUM VIRGATUM	SHENANDOAH	gt38	24"
45	M	PENSTEMON DIGITALIS	FOXGLOVE BEARD TONGUE	gt38	24"
40	N	RUDBECKIA SUBTOMENTOSA	SWEET BLACK EYED SUSAN	gt38	24"
35	O	SCIRPUS FLUVIATILIS	RIVER BULRUSH	gt38	24"
40	P	SCIRPUS PENDULUS	RED BULRUSH	gt38	24"
45	Q	SPARTINA PECINATA	PRAIRIE CORDGRASS	gt38	24"
35	R	TRADESCANTIA OHIENSIS	SPIDERWORT	gt38	24"
35	S	VERBENA HASTAIA	BLUE VERBENA	gt38	24"
40	T	VERONICASTRUM VIRGINICUM	CULVER'S ROOT	gt38	24"

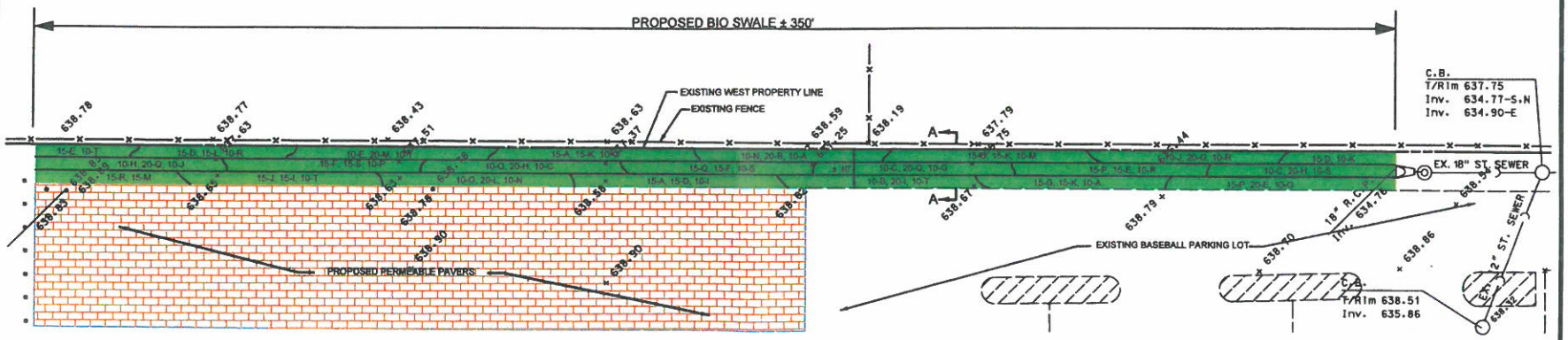

STRIP & REMOVE ALL EXISTING VEGETATION FROM EXISTING SWALE AND REMOVE MINIMUM 4" EXISTING TOPSOIL & AMEND WITH 50% SAND MIXTURE. PLANT WITH PLUGS AS INDICATED.

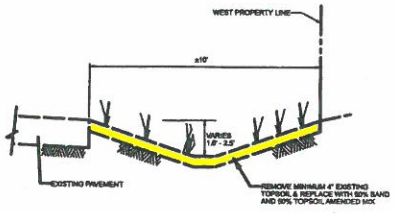

BIO SWALE, SECTION A-A
N.T.S.

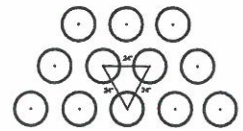

NOTE
PLANTS TO BE SET APPROXIMATELY AS SHOWN, BUT NOT IN FIXED ROWS-SHOULD HAVE A 'NATURAL' APPEARANCE WITH EDGES WHERE TWO BEDS MEET HAVING A 3'-6' OVERLAP WITH SPECIES BY RANDOM INTERMIXING FROM EACH BED.

DANIEL CREANEY COMPANY
CONSULTING CIVIL ENGINEERS
490 SKOKIE BLVD. SUITE 105
NORTHBROOK, ILLINOIS (847) 480-5757

DESIGNED BY: R.H. CHECKED BY: R.H. SCALE: 1" = 10'
DRAWN BY: S.W. & E.K. JOB NO.: 6783-A BOOK:

WOLTERS FIELD PERMEABLE PAVER
PARKING LOT AND WATER RESOURCE IMPROVEMENTS
1040 PARK AVENUE WEST
HIGHLAND PARK, ILLINOIS

BIO SWALE PLANTING LAYOUT

DATE	BY	REVISION
1-16-2014	R.H.	IEPA DRAFT REVISIONS

SHEET 1 OF 1
DATE

PROJ. NO. 6783-A

2/10/2014
J:\DGN\6783-A\DWG\BIO SWALE PLANTING LAYOUT.dgn

PHASE I: Permeable Paver Parking Lot – Before Pictures

June to August 2014

Phase I

Southeast parking lot looking south from varsity baseball lot.

This photo is taken looking east of the area between the varsity baseball field and existing concession/ transportation building looking east.

Phase II

Stadium parking area, center drive looking north.

PHASE I: Permeable Paver Parking Lot

June to August 2014

West permeable paver parking lot after striping of asphalt & beginning to recompact.

Installation of Pavers:

Equipment used to mechanically place the Permeable Pavers.

West Permeable Paver Parking Lot:

Lot shown at approximately 25% complete.

PHASE I: Permeable Paver Parking Lot

June to August 2014

West Permeable Paver Parking Lot:

North edge of Permeable Paver Lot where it abuts existing parking lot.

Permeable Paver Parking Lot approximately 80% completion.

Joints are ready to be in-filled.

Permeable Paver Parking Lot Completed.

PHASE I: Permeable Paver Parking Lot

June to August 2014

Permeable paver parking lot and Bio-Swale completed.

Connecting Driveway:

Rough grading and curbs installed.

Grass Pave II placement prior to Soil/Sand In-fill.

PHASE I: Permeable Paver Connecting Drive and Grass Paver Parking

June to August 2014

Bleacher Driveway and Connecting Driveway completed.

Grass Pave Parking Hydro-seeded and Completed Black Vinyl Fence.

Connecting Driveway and Sidewalk.

PHASE I: Permeable Paver Connecting Drive and Grass Paver Parking

June to August 2014

Established bio-swale 2015
Adjacent to permeable parking lot.

Established bio-swale 2015
Adjacent to existing varsity baseball parking lot.

PHASE II: Permeable Paver Parking Lot

June to August 2015

Existing asphalt removed & subgrade preparation.

Storm sewer installation down center of stadium lot.

Curb installation east side of stadium lot.

PHASE II: Permeable Paver Parking Lot

June to August 2015

Storm sewer down connecting driveway to administration parking lot.

Stone base course installation.

Prep for paver installation & begin brick work.

PHASE II: Permeable Paver Parking Lot

June to August 2015

Mechanically installing permeable paver.

Mechanically installing permeable paver.

Paver installation north end of stadium parking lot.

PHASE II: Permeable Paver Parking Lot

June to August 2015

Infilling brick with fine stone aggregate.

Completed stadium parking lot.

Area being prepared for grass Pave and sod.

PHASE II: Permeable Paver Parking Lot

June to August 2015

Bleacher Driveway and Connecting Driveway completed.

Connecting drive graded and prepared for permeable pavers.

Paver installation along connecting drive.

PHASE II: Permeable Paver Parking Lot

June to August 2015

Finished connecting drive to admin parking lot.

Finished permeable paver parking lot.

Finished parking and Grass Pave II